MOUNTAIN SKY

CONSTRUCTION DOCUMENTS - FILING 1

A PARCEL OF LAND IN THE SOUTH HALF OF THE SOUTHWEST QUARTER OF SECTION 4, TOWNSHIP 1 NORTH, RANGE 66 WEST OF THE SIXTH PRINCIPAL MERIDIAN, CITY OF FORT LUPTON, COUNTY OF WELD, STATE OF COLORADO

LEGEND

- ROW/PROPERTY LINE
- CENTERLINE
- PROPERTY BOUNDARY
- EASEMENT
- EX. EASEMENT
- PROP. CONTOURS 4945
- EX. CONTOURS 4945
- FINISH GRADE SLOPE 0.6%
- FINSHED GRADE SPOT ELEVATION × 20.15
- PROP. WATER MAIN —W—W—
- PROP. WATER VALVE
- PROP. FIRE HYDRANT
- PROP. SANITARY SEWER MAIN —S—
- PROP. SANITARY SEWER CLEANOUT
- PROP. STORM DRAIN —D—
- PROP. STORM DRAIN INLET
- PROP. STORM DRAIN FLARED END SECTION
- PROP. RIPRAP
- SANITARY SEWER MANHOLE NUMBER 16
- STORM DRAINAGE MANHOLE NUMBER MH-5
- PROP. GAS MAIN —G—G—G—
- EX. GAS MAIN —G—G—G—
- EX. WATER MAIN —W—W—W—
- EX. WATER VALVE
- EX. FIRE HYDRANT
- EX. SANITARY SEWERS —S—
- EX. STORM DRAIN —D—
- EX. STORM DRAIN INLET
- EX. POWER POLE
- EX. UNDERGROUND ELECTRIC —E—E—
- EX. UNDERGROUND TELEPHONE —T—
- EX. OVERHEAD ELECTRIC LINE —OHE—
- EX. FENCE —X—X—X—

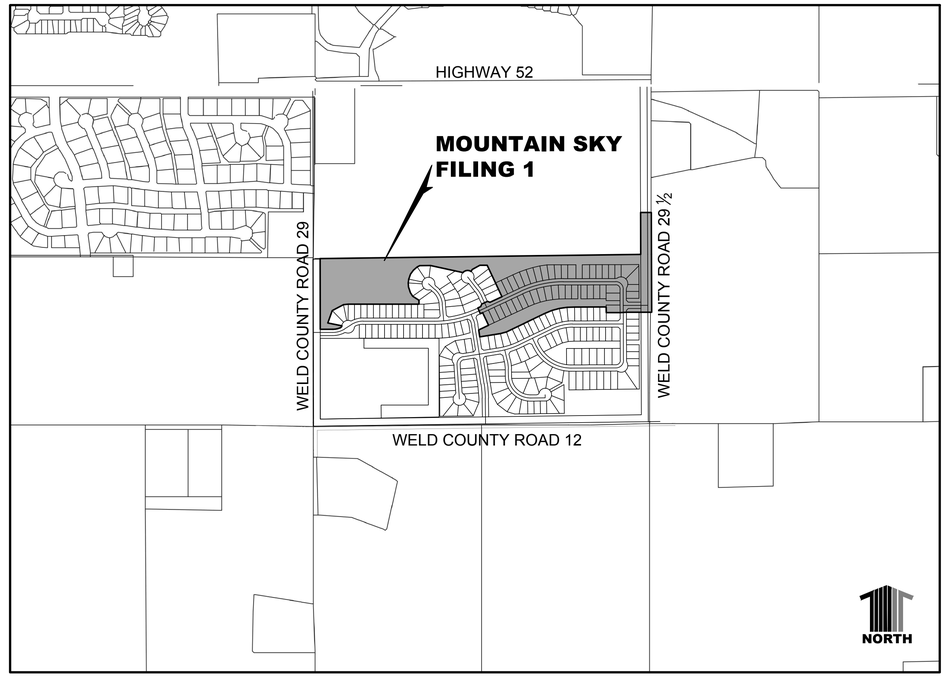

VICINITY MAP

SCALE: 1"=600'

SHEET INDEX

TS1	1	TITLE SHEET
GN1	2	GENERAL NOTES
GN2	3	GENERAL NOTES AND TYPICAL SECTIONS
FP1	4	FILING LOTTING PLAN
OU1	5	OVERALL UTILITY PLAN
OU2	6	OVERALL UTILITY PLAN
RD1	7	ROADWAY PLAN AND PROFILE
RD2	8	ROADWAY PLAN AND PROFILE
RD3	9	ROADWAY PLAN AND PROFILE
IT1	10	INTERSECTION DESIGNS
SD1	11	STORM SEWER PLAN AND PROFILE
SD2	12	STORM SEWER PLAN AND PROFILE
WS1	13	WATER AND SANITARY PLAN AND PROFILE
WS2	14	WATER AND SANITARY PLAN AND PROFILE
WS3	15	WATER AND SANITARY PLAN AND PROFILE
WS4	16	WATER AND SANITARY PLAN AND PROFILE
WS5	17	WATER AND SANITARY PLAN AND PROFILE
WS6	18	WATER AND SANITARY PLAN AND PROFILE
WS7	19	WATER AND SANITARY PLAN AND PROFILE
SS1	20	SANITARY SEWER OUTFALL
UD1	21	UNDERDRAIN OUTFALL
GR1	22	GRADING PLAN
GR2	23	GRADING PLAN
CH1	24	CHANNEL GRADING
CH2	25	CHANNEL GRADING
EC1	26	EROSION CONTROL PLAN
EC2	27	EROSION CONTROL PLAN
DT1	28	SITE DETAILS
DT2	29	POND OUTLET STRUCTURE DETAIL
DT2	29	POND OUTLET STRUCTURE DETAIL
DT3	30	STORM SEWER DETAILS
DT4	31	SANITARY SEWER DETAILS
DT5	32	WATER DETAILS
DT6	33	WATER DETAILS
L1.1–1.6	34–39	LANDSCAPE PLANS
LD1.1–1.3	40–42	LANDSCAPE DETAILS
I1.1–1.8	43–50	IRRIGATION PLANS

50 TOTAL SHEETS

THESE CONSTRUCTION DOCUMENTS WERE PREPARED BY ME (OR UNDER MY DIRECT SUPERVISION) IN ACCORDANCE WITH THE REQUIREMENTS OF THE CITY OF FORT LUPTON RULES AND REGULATIONS.

BENCHMARK

BENCHMARK: THE SOUTH 1/16 CORNER
BETWEEN SECTIONS 4 AND 5, T. 2 N. R. 66 W.
FOUND ALUM CAP PLS 25937
ELEVATION 4943.57

GREGORY L. PANZA
LICENSED PROFESSIONAL ENGINEER
STATE OF COLORADO NO. 37081
FOR AND ON BEHALF OF
CALIBRE ENGINEERING, INC.
(303) 730–0434
GLP@CALIBRE.US.COM

ABBREVIATIONS:

- BOW – BOTTOM OF WALL
- CB – CATCH BACK
- ℄/CL – CENTERLINE
- CO – CLEANOUT
- DIP – DUCTILE IRON PIPE
- EL – ELEVATION
- EOP – EDGE OF PAVEMENT
- EX – EXISTING
- FDC – FIRE DEPARTMENT CONNECTION
- FES – FLARED END SECTION
- FF – FINISHED FLOOR
- FG – FINISHED GRADE
- FH – FIRE HYDRANT
- FL – FLOWLINE
- GB – GRADE BREAK
- HDPE – HIGH DENSITY POLY–ETHYLENE
- HGL – HYDRAULIC GRADE LINE
- LOD – LIMITS OF DISTURBANCE
- NTS – NOT TO SCALE
- PCR – POINT OF CURB RETURN
- PC – POINT OF CURVATURE
- POC – POINT OF CONNECTION
- PROP – PROPOSED
- PT – POINT OF TANGENCY
- PVC – POLYVINYL CHLORIDE
- RCP – REINFORCED CONCRETE PIPE
- ROW – RIGHT OF WAY
- SF – SILT FENCE
- SS – SANITARY SEWER
- STA – STATION
- STM – STORM
- SW – SIDEWALK
- TC – TOP OF CURB
- TG – TOP OF GRATE
- TOP – TYPE OF PIPE
- TOW – TOP OF WALL
- WT – WATER

AGENCY CONTACTS:

OWNER:
OWNER ENGINEER:
ENGINEER:
SURVEYOR:
CITY OF FT. LUPTON:
ANADARKO:
ELECTRIC:
TELEPHONE:
CABLE:
GAS:
STATE DEPARTMENT OF HEALTH:
DITCH COMPANY:

BASIS OF BEARINGS

BEARINGS ARE GRID BEARINGS COLORADO COORDINATE SYSTEM NAD (1992) CENTRAL ZONE FROM GPS OBSERVATIONS, AND ARE BASED UPON THE SOUTHERLY LINE OF THE SOUTHWEST QUARTER OF SECTION 4, TOWNSHIP1 NORTH, RANGE 66 WEST OF THE SIXTH PRINCIPAL MERIDIAN, COUNTY OF WELD, STATE OF COLORADO AS BEARING N 89°14'03" E.

DEVELOPER:

FL MOUNTAIN SKY LLC
9200 E. MINERAL AVE. #365
CENTENNIAL, CO 80112
PHONE: (303) 907–6982
CONTACT: GENE OSBORNE

ENGINEER:

CALIBRE ENGINEERING, INC
9090 SOUTH RIDGELINE BLVD. SUITE 105
HIGHLANDS RANCH, CO 80129
PHONE: (303) 730–0434
CONTACT: GREGORY L. PANZA

811. UNCC CALL BEFORE YOU DIG 811 OR 1-800-922-1987
Utility Notification Center of Colorado
Administrative Office 303–232–1991
16361 Table Mountain Parkway
Golden, Co. 80403

CALL 2 BUSINESS DAYS IN ADVANCE BEFORE YOU DIG, GRADE OR EXCAVATE FOR THE MARKING OF UNDERGROUND MEMBER UTILITIES.

CALIBRE ENGINEERING, INC. ASSUMES NO RESPONSIBILITY FOR EXISTING UTILITY LOCATIONS (HORIZONTAL AND VERTICAL). THE EXISTING UTILITIES SHOWN ON THIS DRAWING HAVE BEEN PLOTTED FROM THE BEST AVAILABLE INFORMATION. IT IS, HOWEVER, THE RESPONSIBILITY OF THE CONTRACTOR TO FIELD VERIFY THE LOCATIONS OF ALL UTILITIES PRIOR TO THE COMMENCEMENT OF ANY CONSTRUCTION ACTIVITIES.

DATE	REVISION DESCRIPTION
6	
5	
4	
3	
2	
1	

Drawing Name: 20TS1.dwg
Job Number: EQUINOX MTN SKY
Prepared For: FORT LUPTON
Designer: BEM | Drafter: BEM | Checked: GLP

Calibre
Calibre Engineering, Inc.
9090 South Ridgeline Boulevard, Suite 105
Highlands Ranch, CO 80129 (303) 730-0434
www.calibre-engineering.com
Construction Management Civil Engineering Surveying

MOUNTAIN SKY
CONSTRUCTION DOCUMENTS - FILING I
TITLE SHEET

Sheet TS1 1 of 50
Date 30 JUNE 2016

PATH: P:\EQUINOX MTN SKY\CADD\CIVIL\20 - FINAL DEVELOPMENT PLAN PHASE I\20TS1.DWG
PLOTTED BY: Ben Murphy PLOT DATE: 6/30/2016 3:29 PM
XREFS: 20TB.

GENERAL NOTES:

1. CAUTION: LOCATION OF EXISTING UTILITIES SHALL BE VERIFIED BY CONTRACTOR PRIOR TO DATE OF CONSTRUCTION. FOR INFORMATION CONTACT: UTILITY NOTIFICATION CENTER OF COLORADO (UNCC) – 1-800-922-1987. IT IS THE CONTRACTOR'S RESPONSIBILITY TO FIELD VERIFY SIZE, AND HORIZONTAL AND VERTICAL LOCATIONS OF EXISTING FACILITIES PRIOR TO CONSTRUCTION AND NOTIFY THE CITY OF ANY DISCREPANCIES.

2. ALL MATERIALS AND CONSTRUCTION SHALL BE IN CONFORMANCE WITH THE CITY OF FORT LUPTON'S "STANDARDS AND SPECIFICATIONS FOR THE DESIGN AND CONSTRUCTION OF PUBLIC IMPROVEMENTS," LATEST EDITION. ALL WATER MAIN, STORM SEWER, STREETS, AND SANITARY SEWER CONSTRUCTION SHALL BE SUBJECT TO CITY OF FORT LUPTON INSPECTION.

3. ALL TRENCHES SHALL BE ADEQUATELY SUPPORTED AND THE SAFETY OF WORKERS PROVIDED FOR AS REQUIRED BY THE MOST RECENT OCCUPATIONAL SAFETY AND HEALTH ADMINISTRATION (OSHA) "SAFETY AND HEALTH REGULATIONS FOR CONSTRUCTION." THESE REGULATIONS ARE DESCRIBED IN SUBPART P, PART 1926 OF THE CODE OF FEDERAL REGULATIONS. SHEETING AND SHORING SHALL BE UTILIZED WHERE NECESSARY TO PREVENT ANY EXCESSIVE WIDENING OR SLOUGHING OF THE TRENCH WHICH MAY BE DETRIMENTAL TO HUMAN SAFETY, TO THE PIPE BEING PLACED, TO TREES OR TO ANY EXISTING STRUCTURE WHERE EXCAVATIONS ARE MADE UNDER SEVERE WATER CONDITIONS. THE CONTRACTOR MAY BE REQUIRED TO USE AN APPROVED PILING INSTEAD OF SHEETING AND SHORING.

4. IN ALL CASES, MAINTAIN TEN FEET HORIZONTAL DISTANCE BETWEEN WATER AND SANITARY SEWER.

5. COMPACTION OF ALL TRENCHES MUST BE ATTAINED AND COMPACTION TEST RESULTS SUBMITTED TO THE ENGINEER AND THE CITY OF FORT LUPTON PRIOR TO FINAL ACCEPTANCE.

6. THE CONTRACTOR SHALL HAVE ONE SIGNED COPY OF THE PLANS APPROVED BY THE CITY OF FORT LUPTON AND ONE COPY OF THE APPROPRIATE DESIGN AND CONSTRUCTION STANDARDS AND SPECIFICATIONS ON THE JOB SITE AT ALL TIMES.

7. THE CONTRACTOR SHALL NOTIFY THE ENGINEER AND THE CITY'S ENGINEERING INSPECTOR 48 HOURS PRIOR TO THE START OF CONSTRUCTION. A PRE-CONSTRUCTION MEETING SHALL BE SCHEDULED WITH THE CITY'S ENGINEERING INSPECTOR 24 HOURS PRIOR TO START OF WORK.

8. THE CONTRACTOR IS RESPONSIBLE FOR IMPLEMENTING AND MAINTAINING EROSION AND SEDIMENT CONTROL MEASURES AT ALL TIMES DURING CONSTRUCTION. THE PLAN MAY BE MODIFIED WITH APPROPRIATE APPROVALS FROM THE CITY'S ENGINEERING DIVISION AS FIELD CONDITIONS WARRANT.

9. AT LEAST FIVE (5) WORKING DAYS PRIOR TO THE BEGINNING OF CONSTRUCTION, A TRAFFIC CONTROL PLAN SHALL BE SUBMITTED TO THE CITY. THE TRAFFIC CONTROL PLAN SHALL BE PREPARED BY A CERTIFIED TRAFFIC CONTROL SUPERVISOR AND SHALL BE IN CONFORMANCE WITH THE MANUAL ON UNIFORM TRAFFIC CONTROL DEVICES. NO WORK SHALL BEGIN UNTIL ALL TRAFFIC CONTROL DEVICES HAVE BEEN PLACED IN ACCORDANCE WITH THE PLAN. THE CONTRACTOR SHALL CONTINUOUSLY MAINTAIN THE TRAFFIC CONTROL DEVICES FOR THE ENTIRE DURATION OF THE PROJECT OR UNTIL THE ROADWAY HAS BEEN OPENED AND THE PERMANENT TRAFFIC CONTROL DEVICES HAVE BEEN INSTALLED.

10. BENCHMARK: THE SOUTH ONE-SIXTEENTH CORNER, FOUND IN ALUMINUM CAP PLS 25937. LOCATED: BETWEEN SECTIONS 4 AND 5, T. 2 N R. 66 W. AS DESCRIBED BY THE CITY OF FORT LUPTON. ELEVATION = 4943.57

11. BASIS OF BEARING: BASIS OF BEARING SHALL BE IN ACCORDANCE WITH THE CITY OF FORT LUPTON'S COORDINATE SYSTEM (USGS – NORTH ZONE AND USGS NAD 83, 1992) AND ALIGNED WITH THE CITY'S QUARTER SECTION BEARINGS. A LISTING OF ALL THE QUARTER SECTION MONUMENT WITH THEIR EX-COORDINATE VALUES AND THE SECTION BEARING LINES IS PROVIDED ON THE CITY'S WEB SITE (WWW.FORTLUPTON.ORG).

12. REPAIR OF ANY DAMAGE TO EXISTING IMPROVEMENTS OR LANDSCAPING IS THE RESPONSIBILITY OF THE CONTRACTOR.

13. WHEN AN EXISTING ASPHALT STREET IS CUT, THE STREET MUST BE RESTORED TO A CONDITION EQUAL TO OR BETTER THAN ITS ORIGINAL CONDITION. THE EXISTING STREET CONDITION SHALL BE DOCUMENTED BY THE CITY OF FORT LUPTON'S CONSTRUCTION INSPECTOR BEFORE ANY CUTS ARE MADE. PATCHING SHALL BE DONE IN CONFORMANCE WITH THE CITY OF FORT LUPTON STANDARDS. THE FINISHED PATCH SHALL BLEND SMOOTHLY INTO THE EXISTING SURFACE. ALL LARGE PATCHES SHALL BE PAVED WITH AN ASPHALT LAY_DOWN MACHINE. IN STREETS WHERE MORE THAN ONE CUT IS MADE, AN OVERLAY OF THE ENTIRE STREET WIDTH, INCLUDING THE PATCHED AREAS, MAY BE REQUIRED. THE DETERMINATION OF NEED FOR A COMPLETE OVERLAY SHALL BE MADE BY THE CITY ENGINEER.

14. ALL DAMAGED EXISTING CURB, GUTTER AND SIDEWALK SHALL BE REPAIRED PRIOR TO ACCEPTANCE OF COMPLETED IMPROVEMENTS.

15. ALL CONSTRUCTION ACTIVITIES REQUIRING DEWATERING MUST COMPLY WITH THE STATE OF COLORADO PERMITTING PROCESS FOR "STORMWATER DISCHARGES ASSOCIATED WITH CONSTRUCTION ACTIVITY." FOR INFORMATION, PLEASE CONTACT COLORADO DEPARTMENT OF HEALTH, WATER QUALITY CONTROL DIVISION, WQCD-PE-B2, 4300 CHERRY CREEK DRIVE SOUTH, DENVER, CO 80222-1530. ATTENTION: PERMITS AND ENFORCEMENT SECTION. PHONE 303.692.3500.

16. THE TYPE, SIZE, LOCATION AND NUMBER OF ALL KNOWN UNDERGROUND UTILITIES ARE APPROXIMATE WHEN SHOWN ON THE DRAWINGS. IT SHALL BE THE RESPONSIBILITY OF THE CONTRACTOR TO VERIFY THE EXISTENCE AND LOCATION OF ALL UNDERGROUND UTILITIES ALONG THE ROUTE OF WORK. THE CONTRACTOR SHALL BE RESPONSIBLE FOR UNKNOWN UNDERGROUND UTILITIES.

17. PRIOR TO THE COMMENCEMENT OF ANY CONSTRUCTION, THE CONTRACTOR SHALL CONTACT ALL UTILITIES TO COORDINATE SCHEDULES.

18. CONTRACTOR SHALL NOTIFY ALL RESIDENTS AND/OR BUSINESSES IN WRITING 48 HOURS PRIOR TO ANY SHUT-OFF IN SERVICE. THE NOTICES MUST HAVE CONTRACTOR'S PHONE NUMBER AND NAME OF CONTACT PERSON, AND EMERGENCY PHONE NUMBER FOR AFTER HOURS CALLS. ALL SHUT-OFF'S MUST BE APPROVED BY THE CITY'S UTILITY DIVISION, AND CITY VALVES AND APPURTENANCES SHALL BE OPERATED BY CITY PERSONNEL, UNLESS WRITTEN PERMISSION IS GIVEN OTHERWISE.

19. FOLLOWING CONSTRUCTION OF THE IMPROVEMENTS AND PRIOR TO ENTERING INTO THE TWO-YEAR WARRANTY PERIOD, A COPY OF THE "AS-CONSTRUCTED" PLANS SHALL BE SUBMITTED TO THE CITY IN PAPER, DIGITAL PDF AND DXF FORMATS WITH THE REGISTERED PROFESSIONAL ENGINEER'S STAMP AND SIGNATURE VERIFYING THAT THE PLANS ARE COMPLETE. AS-CONSTRUCED SUBMITTALS SHALL INCLUDE CORRECTED HORIZONTAL AND VERTICAL LOCATIONS OF FITTINGS, FIRE HYDRANTS, MANHOLES AND INLETS AND ANY OTHER RELATED APPURTENANCE. ADDITIONALLY, WATER, RECLAIMED WATER, SANITARY SEWER AND STORM SEWER PROFILE INFORMATION SHALL INCLUDE CORRECT PIPE SIZES, SLOPES, LENGTHS AND MATERIAL TYPES.
IN ADDITION, "HORIZONTALLY CORRECTED" LINE WORK OF THE AS-CONSTRUCTED WATER, RECLAIMED WATER, SANITARY SEWER AND STORM SEWER FEATURES SHALL BE SUBMITTED TO THE GIS DIVISION IN ONE OF THE ACCEPTABLE GIS FORMATS NOTED ABOVE. THIS HORIZONTALLY CORRECTED LINE WORK IS SIMPLY USED TO UPDATE THE DESIGN LINE WORK THAT WAS SUBMITTED AS A PART OF THE CONSTRUCTION PLANS.

20. ALL WORK, INCLUDING CORRECTION WORK, SHALL BE INSPECTED BY A CITY REPRESENTATIVE WHO SHALL HAVE THE AUTHORITY TO HALT CONSTRUCTION WHEN STANDARD CONSTRUCTION PRACTICES ARE NOT BEING ADHERED TO.

21. THE DEVELOPER/OWNER SHALL WARRANT ALL WORK TO BE FREE FROM DEFECTS IN WORKMANSHIP AND MATERIALS FOR A PERIOD OF TWO YEARS FROM THE DATE OF ACCEPTANCE INTO THE WARRANTY PERIOD OF ALL CONSTRUCTION CALLED FOR BY THE PUBLIC IMPROVEMENTS AGREEMENT WITH THE CITY OF FORT LUPTON.

22. ALL PUBLIC WATER, STORM SEWER, AND SANITARY SEWER MAINS AND APPURTENANCES LOCATED IN PUBLIC RIGHT-OF-WAY OR UTILITY EASEMENTS SHALL BE MAINTAINED BY THE CITY OF FORT LUPTON PUBLIC WORKS DEPARTMENT. THE CITY IS NOT RESPONSIBLE FOR REPAIR OR REPLACEMENT OF PAVEMENT, CURB AND GUTTER, LANDSCAPING, OR ANY OTHER PRIVATE IMPROVEMENTS WITHIN UTILITY EASEMENTS DAMAGED DURING UTILITY REPAIR OR MAINTENANCE.

23. NO ACCESS SHALL BE ALLOWED AT REAR OR SIDE PROPERTY LINES WHEN ADJACENT TO PROPERTY LINES.

24. DEVELOPER AND BUILDER SHALL REGULARLY PATROL THE PUBLIC LANDS ADJACENT TO THE DEVELOPMENT TO REMOVE CONSTRUCTION DEBRIS AND KEEP THE SITE CLEAN AND SAFE.

25. STORM DRAINAGE SHALL ONLY BE DISCHARGED ONTO OR ACROSS PUBLIC LAND AS DESCRIBED IN THE APPROVED DRAINAGE STUDY.

26. DEVELOPER SHALL FURNISH THE CITY A LETTER SEALED AND SIGNED BY A REGISTERED PROFESSIONAL ENGINEER THAT ALL STORM DRAINAGE FACILITIES, INCLUDING DETENTION POND VOLUME, HAVE BEEN CONSTRUCTED IN ACCORDANCE WITH THE ACCEPTED PHASE III DRAINAGE REPORT.

27. CONTRACTOR SHALL NOT OPERATE ANY CONSTRUCTION VEHICLES NOR PERFORM ANY CONSTRUCTION OPERATIONS BEFORE 7AM OR AFTER 6PM, MONDAY THROUGH FRIDAY OR BEFORE 8AM AND AFTER 5PM ON SATURDAYS. NO WORK WILL BE ALLOWED ON SUNDAYS OR HOLIDAYS. THE CITY RESERVES THE RIGHT TO FURTHER RESTRICT OR MODIFY THESE HOURS OF OPERATION IF CONDITIONS WARRANT.

28. IF A STREET CUT WITHIN EXISTING PUBLIC ROW IS REQUIRED FOR ANY REASON, THE CONTRACTOR MUST ACQUIRE A ROW PERMIT FROM THE CITY.

29. IF DEWATERING IS REQUIRED, A STATE CONSTRUCTION DEWATERING PERMIT IS REQUIRED FOR DISCHARGES TO A STORM SEWER, CHANNEL, IRRIGATION DITCH, ANY STREET THAT IS TRIBUTARY TO THE AFOREMENTIONED FACILITIES, OR ANY WATERS OF THE UNITED STATES.

GRADING AND EROSION CONTROL NOTES

1. ALL SITE GRADING (EXCAVATION, EMBANKMENT, AND COMPACTION) SHALL CONFORM TO THE RECOMMENDATIONS OF THE LATEST SOILS INVESTIGATION FOR THIS PROPERTY AND SHALL FURTHER BE IN CONFORMANCE WITH THE CITY OF FORT LUPTON'S "STANDARDS AND SPECIFICATIONS FOR THE DESIGN AND CONSTRUCTION OF PUBLIC IMPROVEMENTS," LATEST EDITION. A STATE STORMWATER DISCHARGE PERMIT SHALL BE OBTAINED PRIOR TO ANY GRADING BEING PERFORMED ON SITES LARGER THAN 1 ACRES IN SIZE. THESE PERMITS CAN BE OBTAINED FROM THE STATE WATER QUALITY CONTROL DIVISION (303-692-3500).

2. NATURAL VEGETATION SHALL BE RETAINED AND PROTECTED WHEREVER POSSIBLE. EXPOSURE OF SOIL TO EROSION BY REMOVAL OR DISTURBANCE OF VEGETATION SHALL BE LIMITED TO THE AREA REQUIRED FOR IMMEDIATE CONSTRUCTION OPERATION AND FOR THE SHORTEST PRACTICAL PERIOD OF TIME.

3. TOPSOIL SHALL BE STOCKPILED TO THE EXTENT PRACTICABLE ON THE SITE FOR USE ON AREAS TO BE REVEGETATED. ANY AND ALL STOCKPILES SHALL BE LOCATED AND PROTECTED FROM EROSIVE ELEMENTS.

4. TEMPORARY VEGETATION SHALL BE INSTALLED ON ALL DISTURBED AREAS WHERE PERMANENT SURFACE IMPROVEMENTS ARE NOT SCHEDULED FOR INSTALLATION WITHIN THREE MONTHS. VEGETATION SHALL BE A VIGOROUS, DROUGHT TOLERANT, NATIVE SPECIES MIX. REFER TO SECTION 2.26.00 OF "STANDARDS AND SPECIFICATIONS FOR THE DESIGN AND CONSTRUCTION OF PUBLIC IMPROVEMENTS," LATEST EDITION, FOR SEEDING MIX. PROJECT SCHEDULING SHOULD TAKE ADVANTAGE OF SPRING OR FALL PLANTING SEASONS FOR NATURAL GERMINATION, BUT SEEDED AREAS SHALL BE IRRIGATED, IF CONDITIONS SO MERIT.

5. AT ALL TIMES, THE PROPERTY SHALL BE MAINTAINED AND/OR WATERED TO PREVENT WIND_CAUSED EROSION. EARTHWORK OPERATIONS SHALL BE DISCONTINUED WHEN FUGITIVE DUST SIGNIFICANTLY IMPACTS ADJACENT PROPERTY. IF EARTHWORK IS COMPLETE OR DISCONTINUED AND DUST FROM THE SITE CONTINUES TO CREATE PROBLEMS, THE OWNER/DEVELOPER SHALL IMMEDIATELY INSTITUTE MITIGATIVE MEASURES AND SHALL CORRECT DAMAGE TO ADJACENT PROPERTY.

6. TEMPORARY CUT/FILL SLOPES SHALL NOT EXCEED A STEEPNESS OF 2:1 (H:V). PERMANENT SLOPES SHALL NOT EXCEED 4:1 (H:V) IN AREAS TO BE SEEDED OR SODDED. RETAINING WALLS SHALL BE REVIEWED AND APPROVED BY SEPARATE APPLICATION TO THE BUILDING DIVISION.

7. APPROVAL OF THE GRADING PLAN DOES NOT APPLY TO UTILITY CONSTRUCTION. UTILITY CONSTRUCTION SHALL NOT BEGIN UNTIL APPROVAL BY THE CITY ENGINEER.

8. THE OWNER/DEVELOPER SHALL PROVIDE ANY ADDITIONAL DUST ABATEMENT AND EROSION CONTROL MEASURES DEEMED NECESSARY BY THE CITY, SHOULD CONDITIONS MERIT THEM.

9. TEMPORARY FENCES SHALL BE INSTALLED ALONG ALL BOUNDARIES OF THE CONSTRUCTION LIMITS AS SHOWN ON THE APPROVED EROSION CONTROL PLAN, TO PREVENT GRADING ON PROPERTY NOT OWNED BY THE DEVELOPER. IN ADDITION, THE CITY MAY REQUIRE ADDITIONAL TEMPORARY FENCES IF FIELD CONDITIONS SO MERIT THEM.

10. THIS EROSION AND SEDIMENT CONTROL PLAN HAS BEEN SUBMITTED TO THE CITY OF FORT LUPTON AND IS IN GENERAL CONFORMANCE WITH THE CITY'S EROSION CONTROL STANDARDS. ADDITIONAL EROSION AND SEDIMENT CONTROL MEASURE MAY BE REQUIRED OF THE OWNER AND HIS OR HER AGENTS DUE TO UNFORESEEN EROSION PROBLEMS OR IF THE PROPOSED EROSION CONTROL MEASURES DO NOT FUNCTION AS INTENDED. THE REQUIREMENTS OF THIS EROSION CONTROL PLAN AND THE OBLIGATION OF THE LANDOWNER SHALL RUN WITH THE LAND UNTIL SUCH TIME AS THE EROSION CONTROL PLAN IS PROPERLY COMPLETED, OFFICIALLY MODIFIED OR VOIDED.

11. ALL EROSION CONTROL MEASURES (BMP'S) SHALL BE INSPECTED BY THE CONTRACTOR EVERY 14 DAYS AND AFTER STORM EVENTS. INSPECTION REPORTS SHALL BE KEPT ON SITE AND MADE AVAILABLE AT ALL TIMES FOR CITY REVIEW. ALL EROSION CONTROL DEVICES SHALL BE PROPERLY MAINTAINED.

ROADWAY NOTES:

1. ALL ROADWAY CONSTRUCTION WITHIN THE PUBLIC RIGHTS_OF_WAY SHALL BE IN CONFORMANCE WITH THE CITY OF FORT LUPTON'S "STANDARDS AND SPECIFICATIONS FOR THE DESIGN AND CONSTRUCTION OF PUBLIC IMPROVEMENTS," LATEST EDITION.

2. PAVING SHALL NOT START UNTIL A SOILS REPORT AND PAVEMENT DESIGN HAVE BEEN APPROVED BY THE CITY OF FORT LUPTON'S ENGINEERING DIVISION AND SUBGRADE COMPACTION TEST AND PROOF ROLL HAVE BEEN PERFORMED AND THE RESULTS HAVE MET WITH THE APPROVAL OF THE CITY OF FORT LUPTON. THE PAVEMENT DESIGN REPORT MUST BE SUBMITTED THREE WEEKS PRIOR TO THE ANTICIPATED DATE OF PAVING.

3. PORTLAND CEMENT SHALL BE TYPE II OR TYPE IIA CONFORMING TO ALL REQUIREMENTS OF THE STANDARD SPECIFICATIONS FOR PORTLAND CEMENT ASTM C_15C.

4. ALL CURB RETURNS WITHIN PUBLIC RIGHT_OF_WAY SHALL BE CONSTRUCTED WITH HANDICAP RAMPS IN ACCORDANCE WITH THE CITY OF FORT LUPTON STANDARDS AND STANDARD SPECIFICATIONS. ALL HANDICAP RAMPS SHALL INCLUDE A TRUNCATED DOME DETECTABLE WARNING PATTERN AS SHOWN ON THE ROADWAY DETAILS.

5. CONTRACTOR SHALL STRAIGHT SAWCUT EXISTING ASPHALT PAVEMENT WHEN JOINING WITH NEW ASPHALT PAVEMENT. APPLY SS_1 TACK COAT.

6. WATER SHALL BE USED AS A DUST PALLIATIVE.

STORM SEWER/IRRIGATION PIPE NOTES

1. ALL STORM SEWER LINE MATERIALS AND CONSTRUCTION SHALL BE IN CONFORMANCE WITH THE CITY OF FORT LUPTON'S "STANDARDS AND SPECIFICATIONS FOR THE DESIGN AND CONSTRUCTION OF PUBLIC IMPROVEMENTS," LATEST EDITION.

2. PUBLIC STORM SEWER SHALL BE REINFORCED CONCRETE PIPE (RCP), MINIMUM CLASS III OR EQUIVALENT.

3. CONTRACTOR SHALL VERIFY HORIZONTAL AND VERTICAL LOCATIONS OF EXISTING STORM SEWER POINTS OF CONNECTIONS PRIOR TO CONSTRUCTION OF ANY PROPOSED STORM SEWER.

4. ALL STORM SEWER SHALL HAVE CLASS "B" BEDDING UNLESS OTHERWISE SHOWN. BEDDING MATERIAL SHALL CONFORM TO ASTM C_33 OR D_448, GRADATION NO. 67.

5. THE ENGINEER SHALL FURNISH THE CITY WITH A SET OF PLANS MARKED WITH "AS_BUILT." THE PLANS SHALL SHOW MANHOLE AND INLET LOCATIONS, PIPE SIZES AND ANY VARIATIONS FROM THE APPROVED PLAN.

6. MANHOLES, BARRELS AND CONES SHALL BE CONSTRUCTED OF PRECAST CONCRETE. CAST_IN_PLACE MANHOLES SHALL NOT BE ALLOWED.

7. PRECAST MANHOLES AND RISERS SHALL BE MANUFACTURED IN CONFORMITY WITH ASTM DESIGNATION C_478. ALL CONES SHALL BE ECCENTRIC.

8. THE FLEXIBLE PLASTIC JOINT SEALING COMPOUND SHALL BE "RAMNEK," RUBBERNECK OR APPROVED EQUAL.

9. NO BACKFILL MATERIAL SHALL BE PLACED ABOVE THE SPRINGLINE OF THE PIPE UNTIL A CITY REPRESENTATIVE HAS AUTHORIZED BACKFILLING. IT SHALL BE THE DUTY OF THE CONTRACTOR TO NOTIFY THE CITY 48 HOURS IN ADVANCE OF PROPOSED BACKFILL OPERATIONS SO A CITY REPRESENTATIVE MAY INSPECT THE PIPE AND THE BEDDING PRIOR TO BACKFILLING.

ENGINEER'S NOTES:

1. LOCATION OF ALL EXISTING UTILITIES (PRIVATE OR PUBLIC) SHALL BE IDENTIFIED OR VERIFIED BY CONTRACTOR PRIOR TO MOBILIZATION, CONSTRUCTION, OR ORDERING OF MATERIALS. FOR INFORMATION CONTACT: DENVER INTER-UTILITY GROUP, 1-800-922-1987 OR LOCAL AGENCY, PRIVATE ENTITY, OR OTHER ASSOCIATED ENTITIES WITHIN THE LIMITS OF CONSTRUCTION. THE CONTRACTOR SHALL BEAR THE FULL COST OF REMOVAL, REPLACEMENT, AND DELAY RELATED TO UNVERIFIED EXISTING CONDITIONS. WHERE THE CONTRACTOR FINDS CONFLICTS OR DISCREPANCIES THEY SHALL BE REPORTED IMMEDIATELY TO THE ENGINEER.

2. THE CONTRACTOR SHALL PERFORM ALL WORK NECESSARY TO COMPLETE THE WORK SHOWN ON THE PLANS OR DESCRIBED IN THE SPECIFICATIONS IN A SATISFACTORY MANNER. UNLESS OTHERWISE PROVIDED. THE CONTRACTOR SHALL FURNISH ALL MATERIALS, EQUIPMENT, TOOLS, LABOR, AND INCIDENTALS TO COMPLETE THE WORK.

3. IN SOME CASES THERE ARE AREAS OF THE SITE DEPICTED ON MORE THAN ONE PAGE OF THE PLANS, HOWEVER ALL IMPROVEMENTS ARE NOT DEPICTED ON EVERY PAGE. THE CONTRACTOR SHALL REVIEW EACH PAGE OF THE PLANS AND DETAILS AND SHALL CONSTRUCT ALL IMPROVEMENTS REGARDLESS OF WHETHER THEY ARE SHOWN ON EVERY PAGE. WHERE DISCREPANCIES ARE FOUND ON PLANS OR DETAILS SHOWN ON THE PLANS THE CONTRACTOR SHALL NOTIFY THE ENGINEER PRIOR TO BEGINNING CONSTRUCTION. THE CONTRACTOR SHALL BEAR THE FULL COST OF REMOVAL, REPLACEMENT, DELAY, AND MOBILIZATION RELATED TO FAILURE TO REVIEW ALL PLANS.

4. THE MANUFACTURER/SUPPLIER SHALL DETERMINE PIPE CLASS BASED ON THE MAXIMUM COVER AND BEDDING SHOWN ON THE PLANS AND SOIL TYPE SHOWN IN THE GEOTECHNICAL REPORT. THE CONTRACTOR SHALL PROVIDE PIPE DLOAD CALCULATIONS STAMPED BY A REGISTERED ENGINEER. IN NO CASE SHALL RCP PIPE CLASS BE LESS THAN CLASS III.

SIGNAGE AND STRIPING NOTES:

1. ALL TRAFFIC CONTROL DEVICES SHALL CONFORM TO THE MOST RECENT VERSION OF THE FEDERAL MANUAL ON UNIFORM TRAFFIC CONTROL DEVICES (MUTCD), COLORADO SUPPLEMENTAL MUTCD, AND THE CITY OF FORT LUPTON ROADWAY DESIGN AND CONSTRUCTION CRITERIA MANUAL. FURTHER SPECIFICATIONS AND ILLUSTRATIONS ARE LOCATED IN THE COLORADO DEPARTMENT OF TRANSPORTATION (CDOT) M AND S STANDARDS.

2. A FIELD INSPECTION OF LOCATION AND INSTALLATION OF ALL SIGNS AND MARKING SHALL BE PERFORMED BY THE CITY OF FORT LUPTON.

3. THE CONTRACTOR INSTALLING SIGNS SHALL BE RESPONSIBLE FOR THE LOCATING AND PROTECTING OF ALL UNDERGROUND UTILITIES.

4. TYPE III (LIGHTED) BARRICADES SHALL BE SET AT THE ENDS OF ROADWAYS SEPARATING FINISHED (AND/OR ACCEPTED) AND UNFINISHED CONSTRUCTION AREAS AND SHALL BE MAINTAINED BY THE CONTRACTOR/DEVELOPER. A "ROAD CLOSED AHEAD" AND "TO BE EXTENDED" WARNING SIGNS SHALL BE INSTALLED APPROPRIATELY IN ADVANCE OF THE TYPE III BARRICADES.

5. SPECIAL CARE SHALL BE TAKEN IN SIGN LOCATIONS TO ENSURE AN UNOBSTRUCTED VIEW OF EACH SIGN.

6. WHERE STOP SIGN CONTROL IS APPROPRIATE, 36-INCH STOP SIGNS SHALL BE USED FOR APPROACHES TO ANY ROADWAY THAT IS CLASSIFIED AS A COLLECTOR OR GREATER.

7. A 7-FOOT MINIMUM POST LENGTH SHALL BE MAINTAINED FROM THE BOTTOM OF THE SIGN PANEL TO THE GROUND. THIS REQUIREMENT FOR VERTICAL CLEARANCE IS FOR ALL SIGNS.

8. DELINEATION OF ROADWAYS SHALL BE AS SPECIFIED IN THE COLORADO DEPARTMENT OF TRANSPORTATION M AND S STANDARDS.

9. RAISED MEDIAN ISLAND NOSES SHALL HAVE R4-7 SIGNS AT EACH END.

10. SIGNAGE AND STRIPING HAVE BEEN DETERMINED BY INFORMATION AVAILABLE AT THE TIME OF PRIOR TO THE INITIATION OF ANY WARRANTY PERIOD, THE CITY OF FORT LUPTON RESERVES THE RIGHT TO REQUIRE MODIFICATIONS TO EXISTING, OR INSTALLATION OF, ADDITIONAL SIGNAGE AND/OR PAVEMENT MARKING IF IT IS DETERMINED THAT CONDITIONS WARRANT SUCH MODIFICATION ACCORDING TO THE MUTCD OR THE CDOT M AND S STANDARDS. ALL SIGNAGE AND STRIPING SHALL FALL UNDER THE REQUIREMENTS OF THE TWO-YEAR WARRANTY PERIOD FOR NEW CONSTRUCTION. ADDITIONALLY, ALL PAVEMENT MARKING SHALL NOT LIFT OR PEEL DURING THE FIRST YEAR AFTER INSTALLATION.

11. DIAMOND GRADE MATERIAL SHALL BE USED ON ALL STOP SIGN AND OVERHEAD SIGNS. ALL OTHER ROADSIDE TRAFFIC CONTROL DEVICES SHALL USE HIGH INTENSITY GRADE SHEETING. NO FLUORESCENT YELLOW-GREEN SHEETING SHALL BE USED UNLESS SPECIFICALLY APPROVED BY THE CITY OF FORT LUPTON.

12. ALL STREET NAME SIGNS SHALL BE HIGH INTENSITY, EXTRUDED, GREEN AND WHITE BLADES AND HAVE ALL UPPER CASE LETTERING. ALL SIGNS SHALL BE 6-INCH BLADES.

13. ALL LAYOUTS FOR INTERNALLY ILLUMINATED STREET NAME SIGNS SHALL BE SUBMITTED TO THE TOWN FOR REVIEW AND APPROVAL PRIOR TO FABRICATION.

14. ALL REMOVED SIGNS SHALL BE RETURNED TO THE CITY OF FORT LUPTON.

DATE	REVISION DESCRIPTION
	6
	5
	4
	3
	2
	1

Drawing Name: 20GN1.dwg
Job Number: EQUINOX MTN SKY
Prepared For: FORT LUPTON
Designer: BEM | Drafter: JDS | Checked: GLP

Calibre
Calibre Engineering, Inc.
9090 South Ridgeline Boulevard, Suite 105
Highlands Ranch, CO 80129 (303) 730-0434
www.calibre-engineering.com
Construction Management Civil Engineering Surveying

MOUNTAIN SKY
CONSTRUCTION DOCUMENTS - FILING I
GENERAL NOTES

Sheet GN1 2 of 50
Date 30 JUNE 2016

PATH: P:\EQUINOX MTN SKY\CADD\CIVIL\20 - FINAL DEVELOPMENT PLAN PHASE I\20GN1.DWG
PLOTTED BY: Ben Murphy PLOT DATE: 6/30/2016 3:29 PM
XREFS: 20TB,

SANITARY SEWER NOTES

1. ALL SANITARY SEWER LINES SHALL BE A MINIMUM OF AN 8 INCH PVC PIPE, ASTM D–3034 SDR 35. SANITARY SEWER LINE MATERIALS AND CONSTRUCTION SHALL BE IN CONFORMANCE WITH THE CITY OF FORT LUPTON'S "STANDARDS AND SPECIFICATIONS FOR THE DESIGN AND CONSTRUCTION OF PUBLIC IMPROVEMENTS," LATEST EDITION.
2. ENGINEER SHALL FURNISH THE CITY WITH A SET OF PLANS MARKED WITH "AS–CONSTRUCTED" LOCATION OF MANHOLES, DISTANCES AND GRADES BEFORE FINAL ACCEPTANCE BY THE CITY.
3. CONTRACTOR SHALL NOTIFY THE CITY OF FORT LUPTON'S ENGINEERING INSPECTOR 48 HOURS PRIOR TO THE START OF CONSTRUCTION.
4. ALL SANITARY SEWER MAINS TESTING SHALL BE DONE IN ACCORDANCE WITH THE CITY OF FORT LUPTON STANDARDS AND SPECIFICATIONS (LATEST REVISION).
5. ALL SANITARY SEWER MAIN CONSTRUCTION SHALL BE DONE BY A CONTRACTOR LICENSED BY THE CITY OF FORT LUPTON.
6. ALL WORK, INCLUDING CORRECTION WORK, SHALL BE INSPECTED BY A CITY REPRESENTATIVE WHO SHALL HAVE THE AUTHORITY TO HALT CONSTRUCTION WHEN STANDARD CONSTRUCTION PRACTICES ARE NOT BEING ADHERED TO.
7. MAINTAIN A MINIMUM OF TEN FEET HORIZONTAL SEPARATION BETWEEN ALL SANITARY SEWER OR RECLAIMED WATER MAINS AND DOMESTIC WATER MAINS AND SERVICES.
8. LOCATION OF EXISTING UTILITIES SHALL BE VERIFIED BY CONTRACTOR PRIOR TO START OF CONSTRUCTION.
9. ALL SEWER SHALL HAVE CLASS "B" BEDDING UNLESS OTHERWISE SHOWN. BEDDING MATERIAL SHALL CONFORM TO ASTM C_33 OR D_448, GRADATION NO. 67.
10. MANHOLES, BARRELS AND CONES SHALL BE CONSTRUCTED OF PRECAST CONCRETE, CAST_IN_PLACE MANHOLES SHALL NOT BE ALLOWED.
11. NO BACKFILL MATERIAL SHALL BE PLACED ABOVE THE SPRINGLINE OF THE PIPE UNTIL A CITY REPRESENTATIVE HAS AUTHORIZED BACKFILLING. IT SHALL BE THE DUTY OF THE CONTRACTOR TO NOTIFY THE CITY 48 HOURS IN ADVANCE OF PROPOSED BACKFILL OPERATIONS SO A CITY REPRESENTATIVE MAY INSPECT THE PIPE AND THE BEDDING PRIOR TO BACKFILLING.
12. STUB SEWER SERVICE LINES 15 FEET INSIDE LOT. INSTALL 4" SERVICE LINES AT 0.0208–FT/FT MINIMUM, 0.0800–FT/FT MAXIMUM SLOPE AND 6" SERVICES AT 0.0104–FT/FT MINIMUM AND 6% MAXIMUM SLOPE. ALL SEWER SERVICES ARE PRIVATE, FROM THE MAIN TO THE BUILDING.
13. SEWER MAINS ABOVE OR LESS THAN 1.5 FEET BELOW A WATER MAIN SHALL BE ENCASED IN CONCRETE OR SHALL BE CONSTRUCTED WITH POLYVINYL CHLORIDE PRESSURE PIPE IN ACCORDANCE WITH AMERICAN WATER WORKS ASSOCIATION C900 FOR 9 FEET EITHER SIDE OF THE WATER MAIN WITH NO JOINTS IN BETWEEN.
14. POOL AND SPA DRAINS SHALL BE BAFFLED PRIOR TO CONNECTING INTO THE CITY'S SANITARY SEWER SYSTEM. DISCHARGE INTO SANITARY SEWER SHALL BE LIMITED TO 100 GPM.

WATER LINE NOTES:

1. ALL WATER MAIN CONSTRUCTION SHALL BE PERFORMED BY A CONTRACTOR LICENSED IN THE CITY OF FORT LUPTON.
2. ALL WATER MAIN MATERIALS AND CONSTRUCTION SHALL BE IN CONFORMANCE WITH THE CITY OF FORT LUPTON'S "STANDARDS AND SPECIFICATIONS FOR THE DESIGN AND CONSTRUCTION OF PUBLIC IMPROVEMENTS," (LATEST EDITION).
3. MINIMUM COVER OVER WATER MAINS SHALL BE FIVE FEET ABOVE TOP OF PIPE.
4. ALL PVC WATER MAINS SHALL BE INSTALLED WITH INSULATED NO. 12 GAGE TYPE UF WIRE TAPED ON TOP OF PIPE AS A TRACER WIRE. TRACER WIRE IS TO BE LOOPED UP TO EACH FIRE HYDRANT AND TERMINATE IN A CATHODIC PROTECTION BOX.
5. TESTING, FLUSHING AND DISINFECTING OF WATER LINES SHALL BE DONE IN ACCORDANCE WITH THE CITY OF FORT LUPTON STANDARDS AND SPECIFICATIONS (LATEST REVISION), AND UNDER THE OBSERVATION OF THE CITY'S INSPECTOR. CHLORINATED WATER SHALL NOT BE DISCHARGED DIRECTLY INTO STREAMS OR PONDS BUT RATHER SHALL BE DECHLORINATED OR DISCHARGED TO THE SANITARY SEWER SYSTEM.
6. FIRE HYDRANT ASSEMBLY INCLUDES THE FIRE HYDRANT, 6" DUCTILE IRON PIPE, VALVE, AND TEE SHALL BE RESTRAINED USING MECHANICAL JOINT RESTRAINTS FROM THE TEE TO THE FIRE HYDRANT. INSTALLATION SHALL BE IN ACCORDANCE WITH CITY OF FORT LUPTON STANDARD DETAILS. ONLY "RED" WATEROUS HYDRANTS WILL BE USED.
7. BLOW_OFFS ARE TO BE LOCATED IN THE STREET SUCH THAT THE CURB AND GUTTER WILL CARRY ANY RUNOFF, PREVENTING DAMAGE TO PRIVATE PROPERTY. VALVE AND BLOW_OFF ASSEMBLY SHOULD ALWAYS BE TURNED AWAY FROM SEWER LINES, AND SHOULD BE PERPENDICULAR TO THE WATER MAIN ALIGNMENT.
8. CONTRACTOR SHALL LOCATE EXISTING PLUGS AND THRUST BLOCKS PRIOR TO CONSTRUCTION AND COORDINATE LOCATIONS WITH THE ENGINEER.
9. INSTALL THRUST BLOCKS AT ALL BENDS, STUBS AND TEES IN WATER LINES. ALL FITTING BENDS SHALL BE RODDED OR MECHANICALLY RESTRAINED ON BOTH SIDES TO THE ADJACENT PIPE PER CITY OF FORT LUPTON STANDARDS AND SPECIFICATIONS.
10. IT IS THE CONTRACTOR'S RESPONSIBILITY TO ADJUST ALL WATER VALVE BOXES TO THE REQUIRED FINAL GRADE.
11. WHEN IT IS NECESSARY TO LOWER WATER MAINS AT STORM SEWERS AND OTHER UTILITY CROSSINGS, A MINIMUM CLEARANCE OF 18 INCHES SHALL BE MAINTAINED BETWEEN OUTSIDE OF PIPES. FOR NEW WATER MAIN CONSTRUCTION, THE VERTICAL PROFILE OF THE WATER MAIN SHALL NOT RESULT IN A HIGH POINT DUE TO THE REQUIRED LOWERING.
12. NO PIPE SHALL BE BACKFILLED UNTIL IT HAS BEEN INSPECTED BY THE CITY.
13. EACH LENGTH OF PIPE SHALL BEAR THE DATE OF MANUFACTURE, TYPE, GRADE, LENGTH, MANUFACTURER'S NAME AND AN NSF SEAL OF APPROVAL ALONG WITH INSTALLATION OF A TRACER WIRE ON ALL PVC PIPE.
14. THE MANUFACTURER SHALL FURNISH A CERTIFIED STATEMENT THAT ALL OF THE SPECIFIED TESTS AND INSPECTIONS HAVE BEEN MADE AND THE RESULTS THEREOF COMPLY WITH THE REQUIREMENT OF THE APPLICABLE STANDARDS HEREIN SPECIFIED. A COPY OF THE CERTIFICATION WILL BE SENT TO THE CITY UPON REQUEST.
15. CONTRACTOR SHALL PLACE A TWO INCH WIDE METALLIC COVERED TAPE LABELED "WATER LINE" TWO FEET ABOVE THE WATER LINE.
16. ALL FIRE HYDRANTS AND FIRE SERVICE LINES MUST BE ISOLATED FROM THE MAIN WITH A VALVE.
17. WATER TAP/METER SIZES SHALL BE DETERMINED BY SEPARATE APPLICATION TO THE BUILDING DIVISION. ANY WATER TAPS PERFORMED PRIOR TO FINAL APPROVAL OF THE APPLICATION SHALL BE REPLACED AT THE DEVELOPER'S EXPENSE IF THE WATER TAP SIZE CHANGES OR THE TAP FEE SHALL BE PAID AT THE HIGHER RATE.
18. CARE SHALL BE TAKEN WHEN CONSTRUCTING THE WATER MAIN SO THAT THE DESIGNED PROFILE IS MAINTAINED AND HIGH POINTS ARE AVOIDED. FIRE HYDRANTS MAY BE REQUIRED AT DESIGNATED HIGH POINTS SO THAT ACCUMULATED AIR CAN BE DISCHARGED.
19. CATHODIC PROTECTION SHALL BE REQUIRED TO PROTECT METAL PIPE FITTINGS. PLEASE COORDINATE WITH THE CITY'S ENGINEERING DIVISION TO GET THE PROPER CATHODIC PROTECTION STANDARD DETAILS. ZINC ANODE CAPS WILL BE REQUIRED FOR BOLT ENDS AT A MINIMUM.
20. FREEZE POTENTIAL OF A WATER MAIN SHALL BE EVALUATED WHEN CROSSING STORM SEWERS.

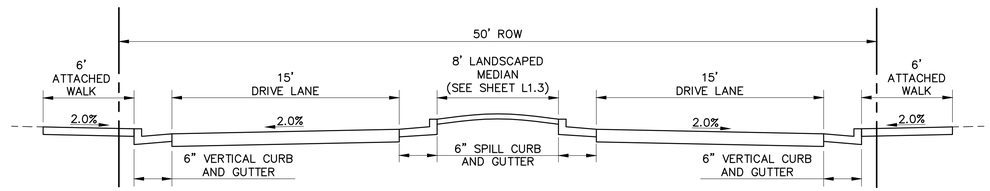

TYPICAL SECTION - LOCAL STREET WITH MEDIAN
1"=5'

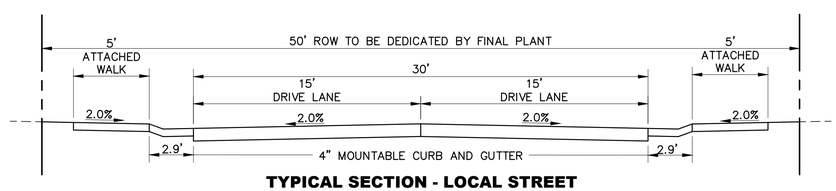

TYPICAL SECTION - LOCAL STREET
1"=5'

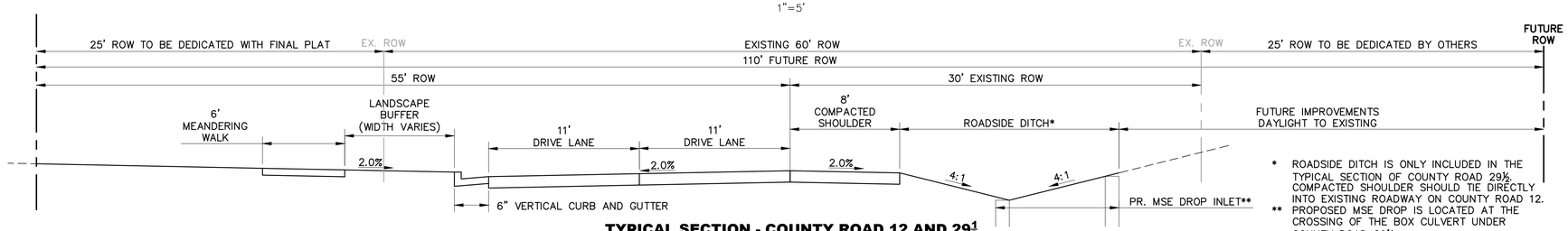

TYPICAL SECTION - COUNTY ROAD 12 AND 29½
1"=5'

* ROADSIDE DITCH IS ONLY INCLUDED IN THE TYPICAL SECTION OF COUNTY ROAD 29½. COMPACTED SHOULDER SHOULD TIE DIRECTLY INTO EXISTING ROADWAY ON COUNTY ROAD 12.
** PROPOSED MSE DROP IS LOCATED AT THE CROSSING OF THE BOX CULVERT UNDER COUNTY ROAD 29½

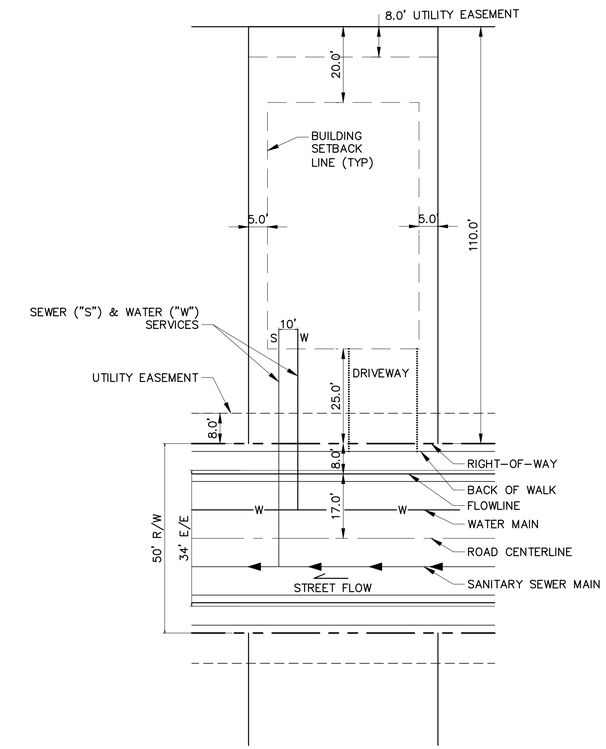

TYPICAL LOT
N.T.S.

DATE	REVISION DESCRIPTION
	6
	5
	4
	3
	2
	1

Drawing Name: 20GN1.dwg
Job Number: EQUINOX MTN SKY
Prepared For: FORT LUPTON
Designer: BEM | Drafter: JDS | Checked: GLP

Calibre
Calibre Engineering, Inc.
9090 South Ridgeline Boulevard, Suite 105
Highlands Ranch, CO 80129 (303) 730-0434
www.calibre-engineering.com
Construction Management Civil Engineering Surveying

MOUNTAIN SKY
CONSTRUCTION DOCUMENTS - FILING I
GENERAL NOTES AND TYPICAL SECTIONS

Sheet **GN2** 3 of 50
Date 30 JUNE 2016

PATH: P:\EQUINOX MTN SKY\CADD\CIVIL\20 - FINAL DEVELOPMENT PLAN PHASE I\20GN1.DWG
PLOTTED BY: Ben Murphy PLOT DATE: 6/30/2016 3:29 PM
XREFS: 20TB,

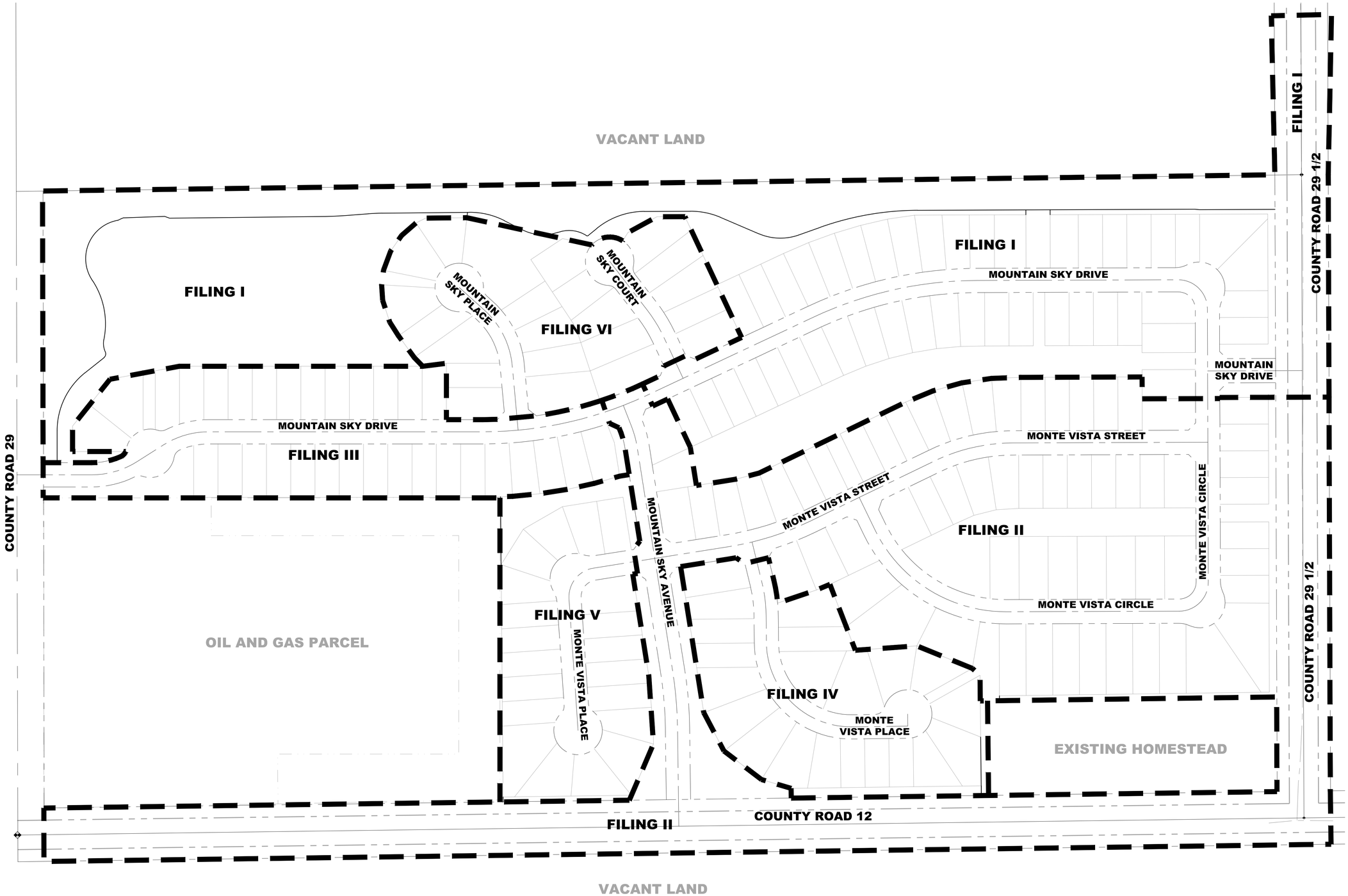

NORTH

PATH: P:\EQUINOX MTN SKY\CADD\CIVIL\20 - FINAL DEVELOPMENT PLAN PHASE I\20FP1.DWG
PLOTTED BY: Ben Murphy PLOT DATE: 6/30/2016 3:30 PM
XREFS: 10BASE, 20TB,

DATE		REVISION DESCRIPTION
	6	
	5	
	4	
	3	
	2	
	1	

Drawing Name: 20FP1.dwg
Job Number: EQUINOX MTN SKY
Prepared For: FORT LUPTON

0 50 100 200
1 inch = 100 ft. Horizontal

Designer	Drafter	Checked
BEM	BEM	GLP

Calibre
Calibre Engineering, Inc.
9090 South Ridgeline Boulevard, Suite 105
Highlands Ranch, CO 80129 (303) 730-0434
www.calibre-engineering.com
Construction Management Civil Engineering Surveying

MOUNTAIN SKY
CONSTRUCTION DOCUMENTS - FILING I
FILING LOTTING PLAN

Sheet FP1

Date 30 JUNE 2016

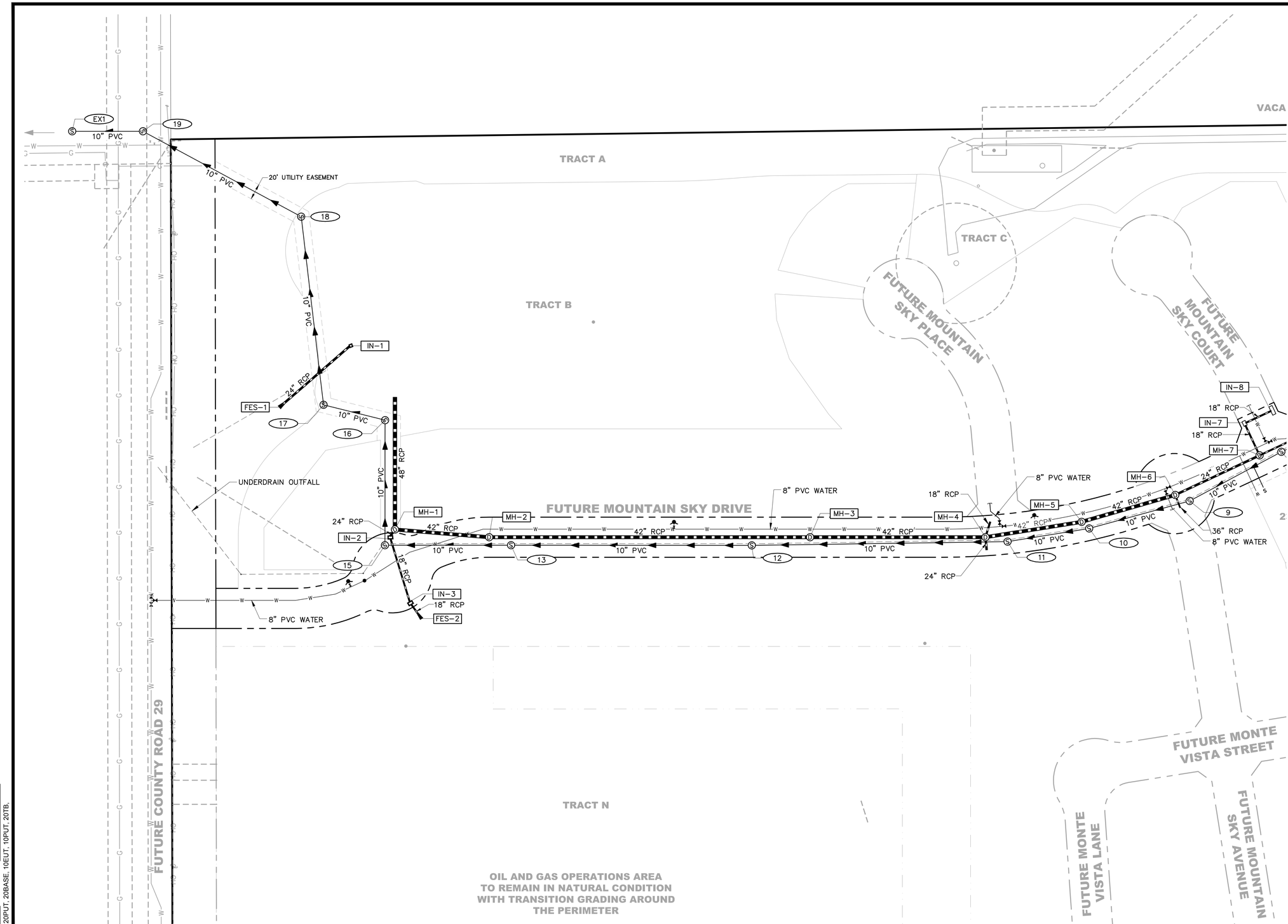

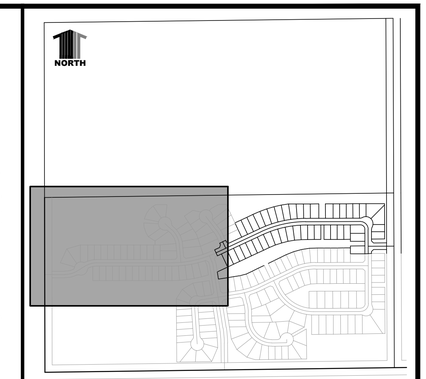

KEYMAP

CONSTRUCTION NOTES:

1. CONSTRUCTION DETAILS AND SPECIFICATIONS SHALL BE PER CITY OF FORT LUPTON, LATEST EDITION UNLESS OTHERWISE NOTED.
2. ALL DIMENSIONS ARE TO FLOWLINE, EXCEPT PROFILES, WHICH ARE CENTERLINE DIMENSIONS, OR UNLESS OTHERWISE NOTED
3. CONTRACTOR SHALL NOTIFY PUBLIC WORKS UTILITIES DIVISION 48 HOURS IN ADVANCE OF COMMENCEMENT OF WORK.

LEGEND

- PROP. WATER MAIN
- PROP. SANITARY SEWER MAIN WITH UNDERDRAIN
- PROP. STORM DRAIN
- PROP. WATER VALVE
- PROP. FIRE HYDRANT
- PROP. STORM DRAIN INLET
- SANITARY SEWER MANHOLE NUMBER (16)
- STORM DRAINAGE MANHOLE NUMBER [MH-5]
- EX. WATER MAIN
- EX. SANITARY SEWERS
- EX. STORM DRAIN
- EX. UNDERGROUND ELECTRIC
- EX. UNDERGROUND TELEPHONE
- EX. GAS MAIN
- EX. WATER VALVE
- EX. FIRE HYDRANT
- EX. STORM DRAIN INLET
- EX. POWER POLE

811 UNCC CALL BEFORE YOU DIG 811 OR 1-800-922-1987 Utility Notification Center of Colorado

DATE	REVISION DESCRIPTION
	6
	5
	4
	3
	2
	1

Drawing Name: 20OU1.dwg
Job Number: EQUINOX MTN SKY
Prepared For: FORT LUPTON
Designer: BEM | Drafter: BEM | Checked: GVM
0 25 50 100
1 inch = 50 ft. Horizontal
1 inch = 0 ft Vertical

Calibre
Calibre Engineering, Inc.
9090 South Ridgeline Boulevard, Suite 105
Highlands Ranch, CO 80129 (303) 730-0434
www.calibre-engineering.com
Construction Management Civil Engineering Surveying

MOUNTAIN SKY
CONSTRUCTION DOCUMENTS - FILING I
OVERALL UTILITY PLAN

Sheet OU1 5 of 50
Date 30 JUNE 2016

PATH: P:\EQUINOX MTN SKY\CADD\CIVIL\20 - FINAL DEVELOPMENT PLAN PHASE I\20OU1.DWG
PLOTTED BY: Ben Murphy PLOT DATE: 6/30/2016 3:30 PM
XREFS: 10EPN, 20KMOU, 20PUT, 20BASE, 10EUT, 10PUT, 20TB,

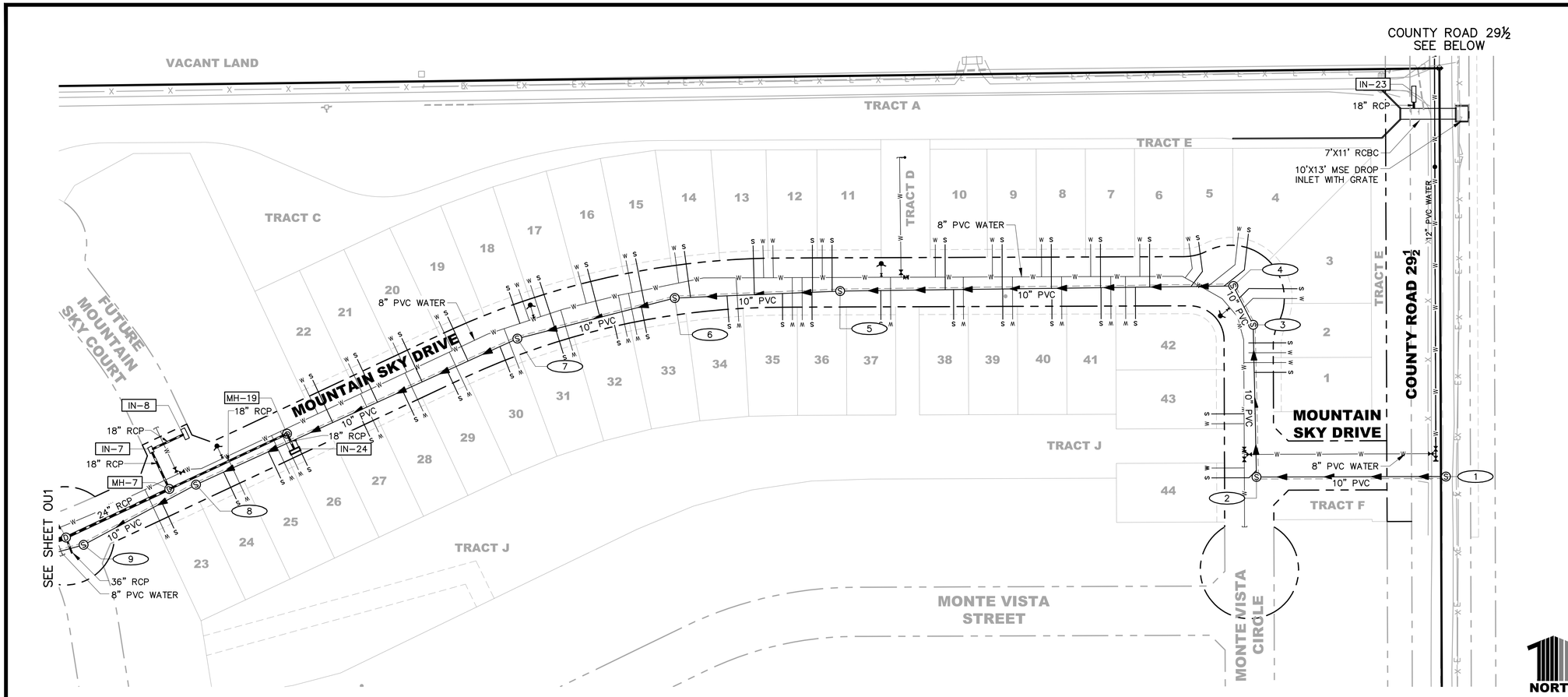

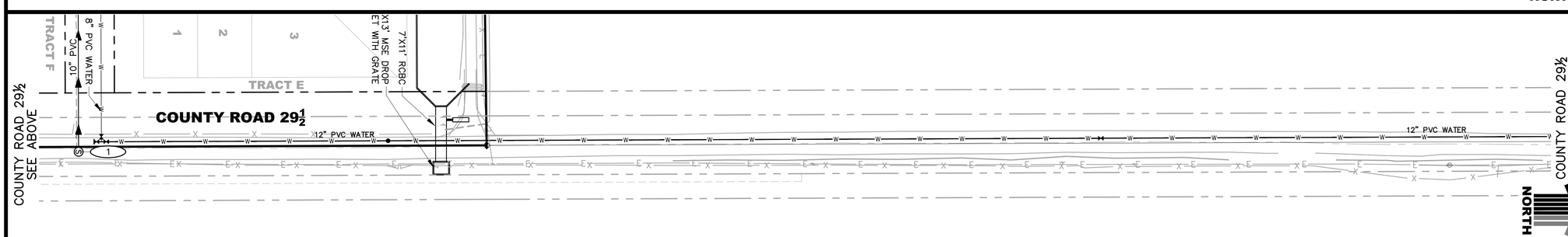

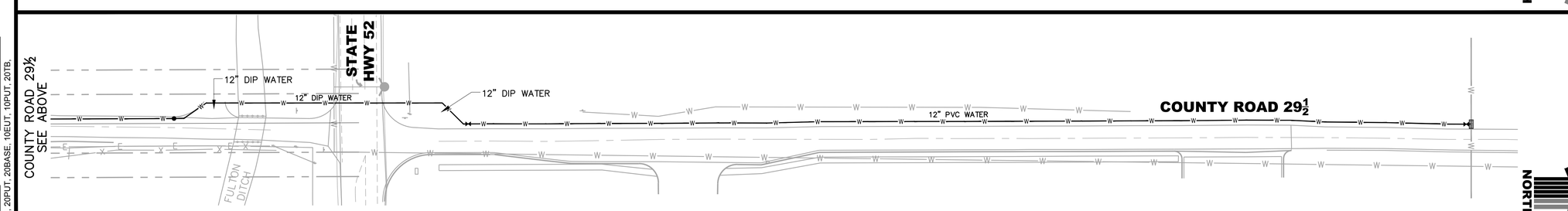

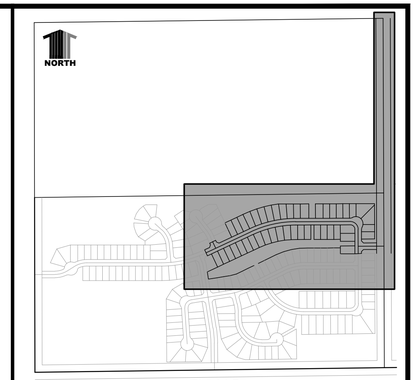

KEYMAP

CONSTRUCTION NOTES:

1. CONSTRUCTION DETAILS AND SPECIFICATIONS SHALL BE PER CITY OF FORT LUPTON, LATEST EDITION UNLESS OTHERWISE NOTED.
2. ALL DIMENSIONS ARE TO FLOWLINE, EXCEPT PROFILES, WHICH ARE CENTERLINE DIMENSIONS, OR UNLESS OTHERWISE NOTED
3. CONTRACTOR SHALL NOTIFY PUBLIC WORKS UTILITIES DIVISION 48 HOURS IN ADVANCE OF COMMENCEMENT OF WORK.

LEGEND

- PROP. WATER MAIN
- PROP. SANITARY SEWER MAIN WITH UNDERDRAIN
- PROP. STORM DRAIN
- PROP. WATER VALVE
- PROP. FIRE HYDRANT
- PROP. STORM DRAIN INLET
- SANITARY SEWER MANHOLE NUMBER (16)
- STORM DRAINAGE MANHOLE NUMBER [MH-5]
- EX. WATER MAIN
- EX. SANITARY SEWERS
- EX. STORM DRAIN
- EX. UNDERGROUND ELECTRIC
- EX. UNDERGROUND TELEPHONE
- EX. GAS MAIN
- EX. WATER VALVE
- EX. FIRE HYDRANT
- EX. STORM DRAIN INLET
- EX. POWER POLE

811 UNCC CALL BEFORE YOU DIG 811 OR 1-800-922-1987 Utility Notification Center of Colorado

DATE	REVISION DESCRIPTION
6	
5	
4	
3	
2	
1	

Drawing Name: 20OU1.dwg
Job Number: EQUINOX MTN SKY
Prepared For: FORT LUPTON
0 30 60 120 — 1 inch = 60 ft. Horizontal
Designer: BEM | Drafter: BEM | Checked: GVM

Calibre
Calibre Engineering, Inc.
9090 South Ridgeline Boulevard, Suite 105
Highlands Ranch, CO 80129 (303) 730-0434
www.calibre-engineering.com
Construction Management Civil Engineering Surveying

MOUNTAIN SKY
CONSTRUCTION DOCUMENTS - FILING I
OVERALL UTILITY PLAN

Sheet OU2 — 6 of 50
Date 30 JUNE 2016

PATH: P:\EQUINOX MTN SKY\CADD\CIVIL\20 - FINAL DEVELOPMENT PLAN PHASE I\20OU1.DWG
PLOTTED BY: Ben Murphy PLOT DATE: 6/30/2016 3:31 PM
XREFS: 10EPN, 20KMOU, 20PUT, 20BASE, 10EUT, 10PUT, 20TB.

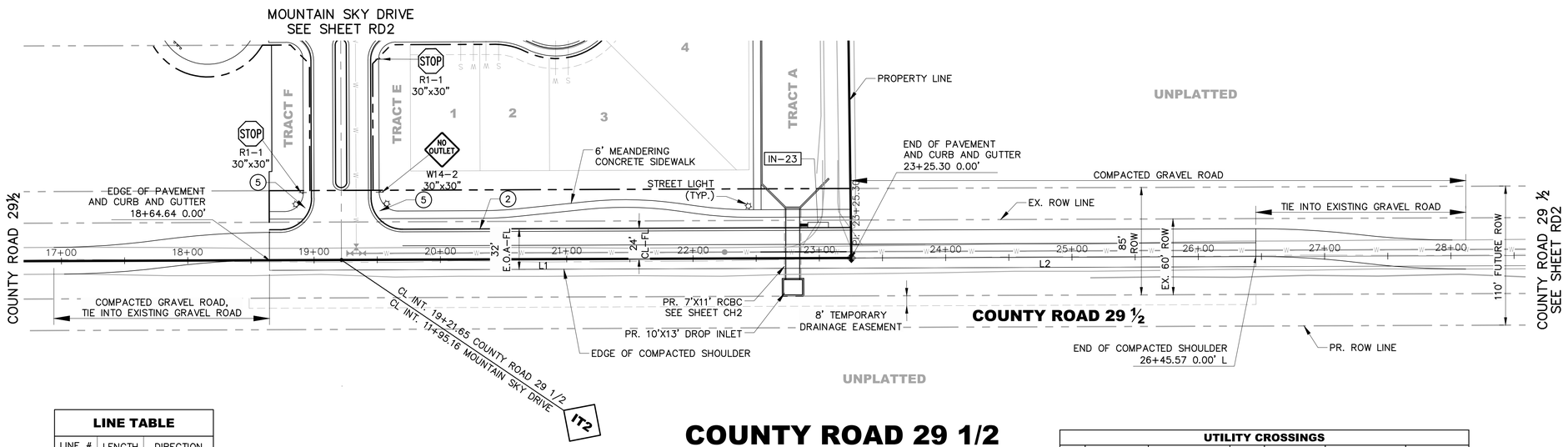

LINE TABLE		
LINE #	LENGTH	DIRECTION
L1	460.67'	N00°13'06"W
L2	320.27'	N00°12'30"W

COUNTY ROAD 29 1/2

(LOCAL DESIGN SPEED 30 MPH)

UTILITY CROSSINGS						
NO.	DESC	ELEV	OVER/ UNDER	DESC	ELEV	CLEARANCE
2	STORM	BOP= 4953.15	OVER	WATER	TOP= 4950.14	3.01

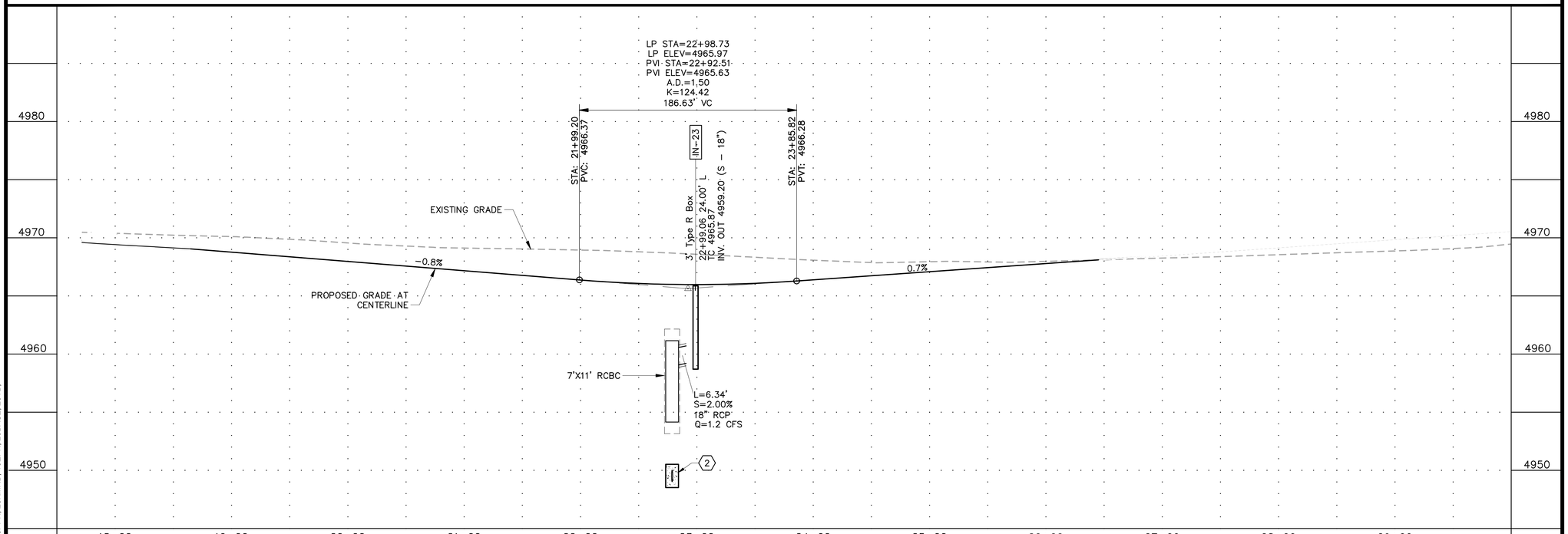

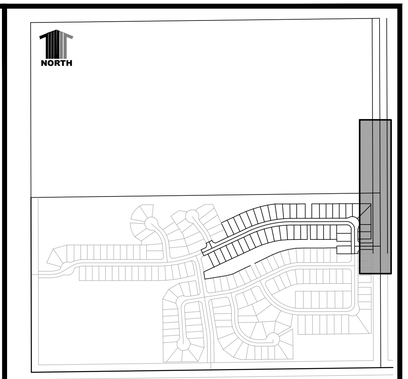

KEYMAP

CONSTRUCTION NOTES:

1. CONSTRUCTION DETAILS AND SPECIFICATIONS SHALL BE PER CITY OF FT. LUPTON, LATEST EDITION UNLESS OTHERWISE NOTED ON PLANS.
2. ALL DIMENSIONS ARE TO FLOWLINE, EXCEPT PROFILE, WHICH ARE CENTERLINE DIMENSIONS, UNLESS OTHERWISE NOTED.
3. SEE LANDSCAPE PLANS FOR TRAILS/WALKS WITHIN TRACTS.

ROADWAY NOTES:

1. VERTICAL MEDIAN SPILL CURB PER FT. LUPTON STD. DETAIL NO. R7
2. VERTICAL CATCH CURB PER FT. LUPTON STD. DETAIL NO. R7
3. MOUNTABLE CURB AND GUTTER PER FT. LUPTON STD. DETAIL NO. R8
4. CURB RAMP COMBINATION CURB, GUTTER AND WALK PER FT. LUPTON STD. DETAIL NO. R9
5. CURB RAMP BARRIER CURB AND WALK PER FT. LUPTON STD. DETAIL NO. R10

IT1 INTERSECTION DESIGN NUMBER (SEE SHEET IT1 FOR DETAILED INTERSECTION DESIGNS)

PROPOSED STORM DRAIN MANHOLE (D)

PROPOSED STORM DRAIN PIPE

PROPOSED STORM DRAIN INLET

PROPOSED TEMPORARY TYPE III BARRICADE, SEE SHEET DT1

(1) INDICATES UTILITY CROSSING

UNCC CALL BEFORE YOU DIG 811 OR 1-800-922-1987

Utility Notification Center of Colorado

DATE	REVISION DESCRIPTION
	6
	5
	4
	3
	2
	1

Drawing Name: 20RD1.dwg
Job Number: EQUINOX MTN SKY
Prepared For: FORT LUPTON

0 25 50 100
1 inch = 50 ft. Horizontal
1 inch = 5 ft Vertical

Designer	Drafter	Checked
BEM	BEM	GLP

Calibre
Calibre Engineering, Inc.
9090 South Ridgeline Boulevard, Suite 105
Highlands Ranch, CO 80129 (303) 730-0434
www.calibre-engineering.com
Construction Management Civil Engineering Surveying

MOUNTAIN SKY

CONSTRUCTION DOCUMENTS - FILING I

ROADWAY PLAN AND PROFILE

Sheet RD1 7 of 50

Date 30 JUNE 2016

PATH: P:\EQUINOX MTN SKY\CADD\CIVIL\20 - FINAL DEVELOPMENT PLAN PHASE I\20RD1.DWG
PLOTTED BY: Ben Murphy PLOT DATE: 6/30/2016 3:32 PM
XREFS: 20PUT, 10PUT, 20PPN, 20KMRD, 10EPN, 20BASE, 20TB,

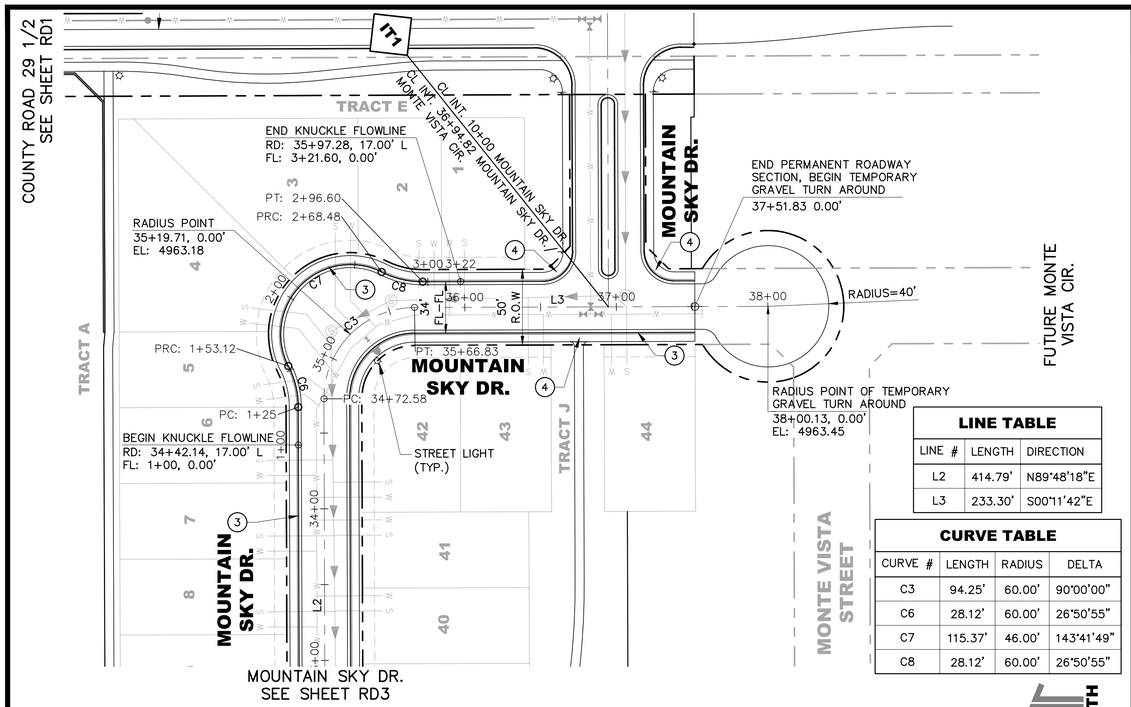

LINE TABLE		
LINE #	LENGTH	DIRECTION
L2	414.79'	N89°48'18"E
L3	233.30'	S00°11'42"E

CURVE TABLE			
CURVE #	LENGTH	RADIUS	DELTA
C3	94.25'	60.00'	90°00'00"
C6	28.12'	60.00'	26°50'55"
C7	115.37'	46.00'	143°41'49"
C8	28.12'	60.00'	26°50'55"

MOUNTAIN SKY DR./MONTE VISTA CIR.

(LOCAL DESIGN SPEED 20 MPH)

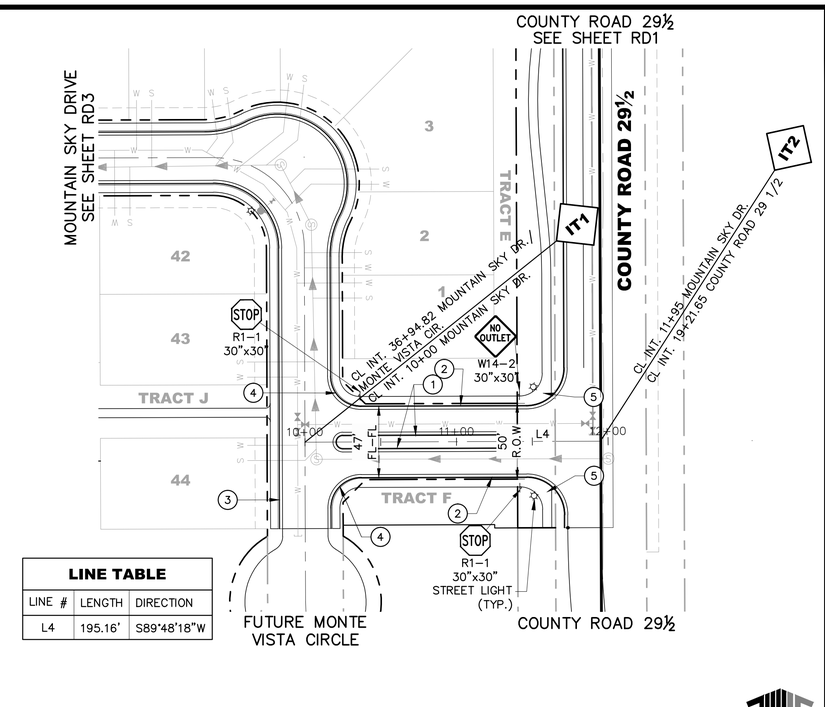

LINE TABLE		
LINE #	LENGTH	DIRECTION
L4	195.16'	S89°48'18"W

MOUNTAIN SKY DRIVE

(LOCAL DESIGN SPEED 20 MPH)

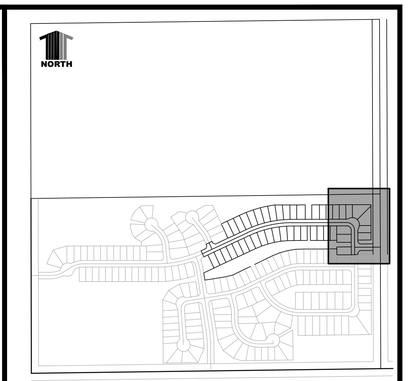

KEYMAP

CONSTRUCTION NOTES:

1. CONSTRUCTION DETAILS AND SPECIFICATIONS SHALL BE PER CITY OF FT. LUPTON, LATEST EDITION UNLESS OTHERWISE NOTED ON PLANS.
2. ALL DIMENSIONS ARE TO FLOWLINE, EXCEPT PROFILE, WHICH ARE CENTERLINE DIMENSIONS, UNLESS OTHERWISE NOTED.
3. SEE LANDSCAPE PLANS FOR TRAILS/WALKS WITHIN TRACTS.

ROADWAY NOTES:

1. VERTICAL MEDIAN SPILL CURB PER FT. LUPTON STD. DETAIL NO. R7
2. VERTICAL CATCH CURB PER FT. LUPTON STD. DETAIL NO. R7
3. MOUNTABLE CURB AND GUTTER PER FT. LUPTON STD. DETAIL NO. R8
4. CURB RAMP COMBINATION CURB, GUTTER AND WALK PER FT. LUPTON STD. DETAIL NO. R9
5. CURB RAMP BARRIER CURB AND WALK PER FT. LUPTON STD. DETAIL NO. R10

IT1 INTERSECTION DESIGN NUMBER (SEE SHEET IT1 FOR DETAILED INTERSECTION DESIGNS)

PROPOSED STORM DRAIN MANHOLE

PROPOSED STORM DRAIN PIPE

PROPOSED STORM DRAIN INLET

PROPOSED TEMPORARY TYPE III BARRICADE, SEE SHEET DT1

1 INDICATES UTILITY CROSSING

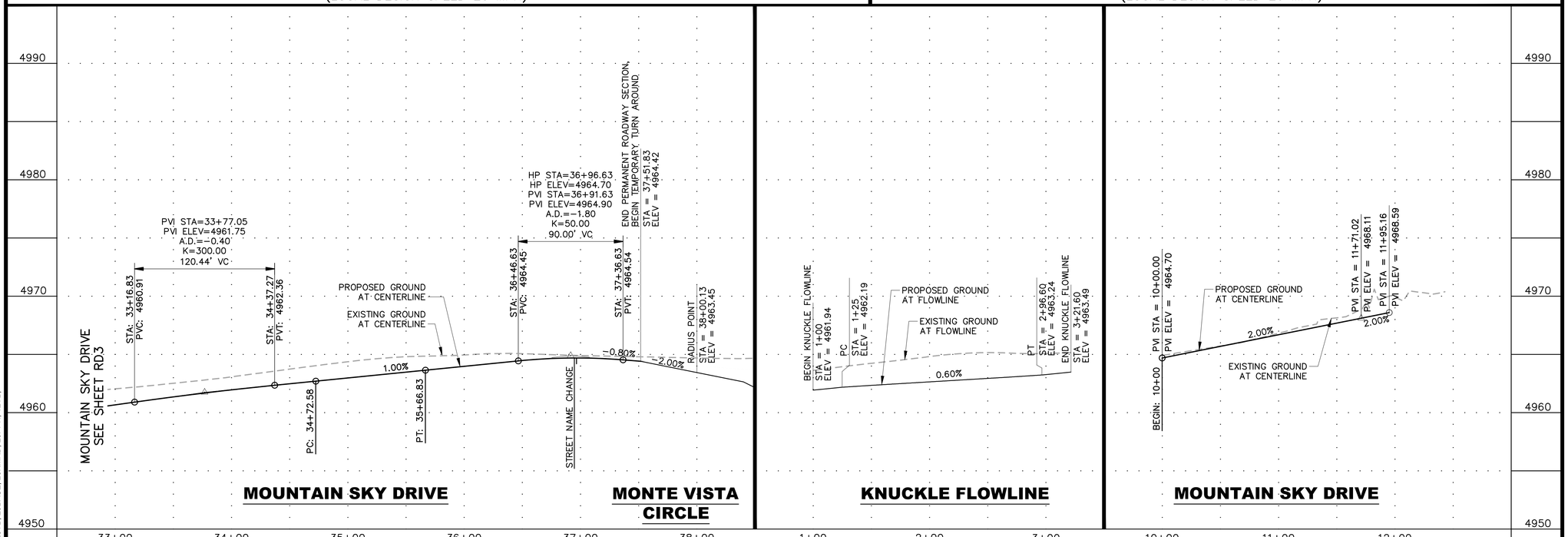

811 UNCC CALL BEFORE YOU DIG 811 OR 1-800-922-1987 Utility Notification Center of Colorado

DATE	REVISION DESCRIPTION
	6
	5
	4
	3
	2
	1

Drawing Name: 20RD3.dwg
Job Number: EQUINOX MTN SKY
Prepared For: FORT LUPTON
Designer: BEM | Drafter: CMM | Checked: GLP
1 inch = 50 ft. Horizontal
1 inch = 5 ft Vertical

Calibre
Calibre Engineering, Inc.
9090 South Ridgeline Boulevard, Suite 105
Highlands Ranch, CO 80129 (303) 730-0434
www.calibre-engineering.com
Construction Management Civil Engineering Surveying

MOUNTAIN SKY

CONSTRUCTION DOCUMENTS - FILING I

ROADWAY PLAN AND PROFILE

Sheet RD2 of 8 / 50

Date 30 JUNE 2016

PATH: P:\EQUINOX MTN SKY\CADD\CIVIL\20 - FINAL DEVELOPMENT PLAN PHASE I\20RD3.DWG
PLOTTED BY: Ben Murphy PLOT DATE: 8/30/2016 3:33 PM
XREFS: 10PUT, 20PUT, 20TB, 20BASE, 20KMRD, 20PPN, 12TB,

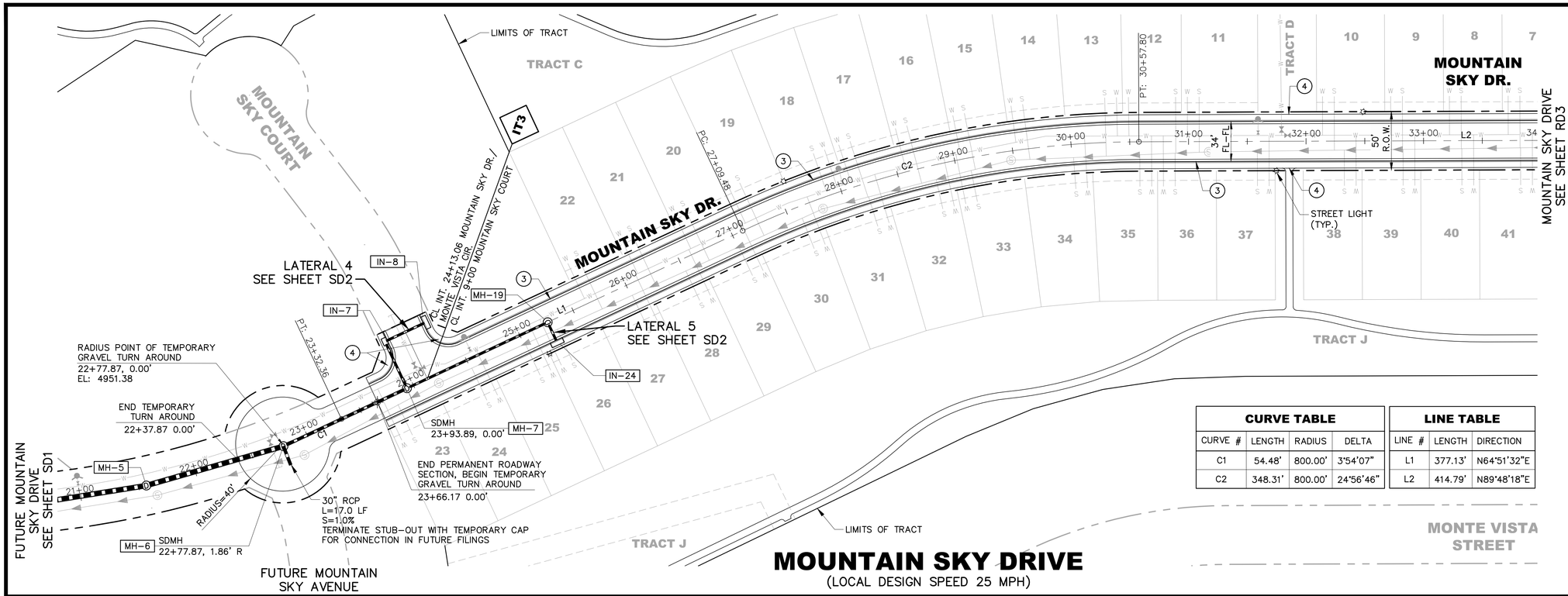

MOUNTAIN SKY DRIVE

(LOCAL DESIGN SPEED 25 MPH)

CURVE TABLE			
CURVE #	LENGTH	RADIUS	DELTA
C1	54.48'	800.00'	3°54'07"
C2	348.31'	800.00'	24°56'46"

LINE TABLE		
LINE #	LENGTH	DIRECTION
L1	377.13'	N64°51'32"E
L2	414.79'	N89°48'18"E

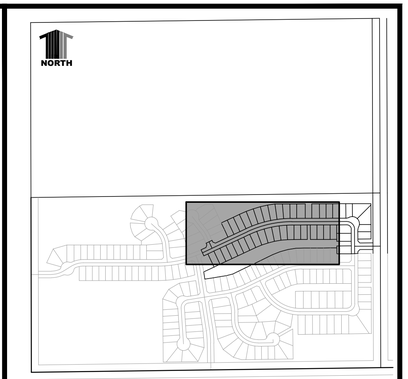

KEYMAP

CONSTRUCTION NOTES:

1. CONSTRUCTION DETAILS AND SPECIFICATIONS SHALL BE PER CITY OF FT. LUPTON, LATEST EDITION UNLESS OTHERWISE NOTED ON PLANS.
2. ALL DIMENSIONS ARE TO FLOWLINE, EXCEPT PROFILE, WHICH ARE CENTERLINE DIMENSIONS, UNLESS OTHERWISE NOTED.
3. SEE LANDSCAPE PLANS FOR TRAILS/WALKS WITHIN TRACTS.

ROADWAY NOTES:

1. VERTICAL MEDIAN SPILL CURB PER FT. LUPTON STD. DETAIL NO. R7
2. VERTICAL CATCH CURB PER FT. LUPTON STD. DETAIL NO. R7
3. MOUNTABLE CURB AND GUTTER PER FT. LUPTON STD. DETAIL NO. R8
4. CURB RAMP COMBINATION CURB, GUTTER AND WALK PER FT. LUPTON STD. DETAIL NO. R9
5. CURB RAMP BARRIER CURB AND WALK PER FT. LUPTON STD. DETAIL NO. R10

IT1 INTERSECTION DESIGN NUMBER (SEE SHEET IT1 FOR DETAILED INTERSECTION DESIGNS)

PROPOSED STORM DRAIN MANHOLE

PROPOSED STORM DRAIN PIPE

PROPOSED STORM DRAIN INLET

PROPOSED TEMPORARY TYPE III BARRICADE, SEE SHEET DT1

1 INDICATES UTILITY CROSSING

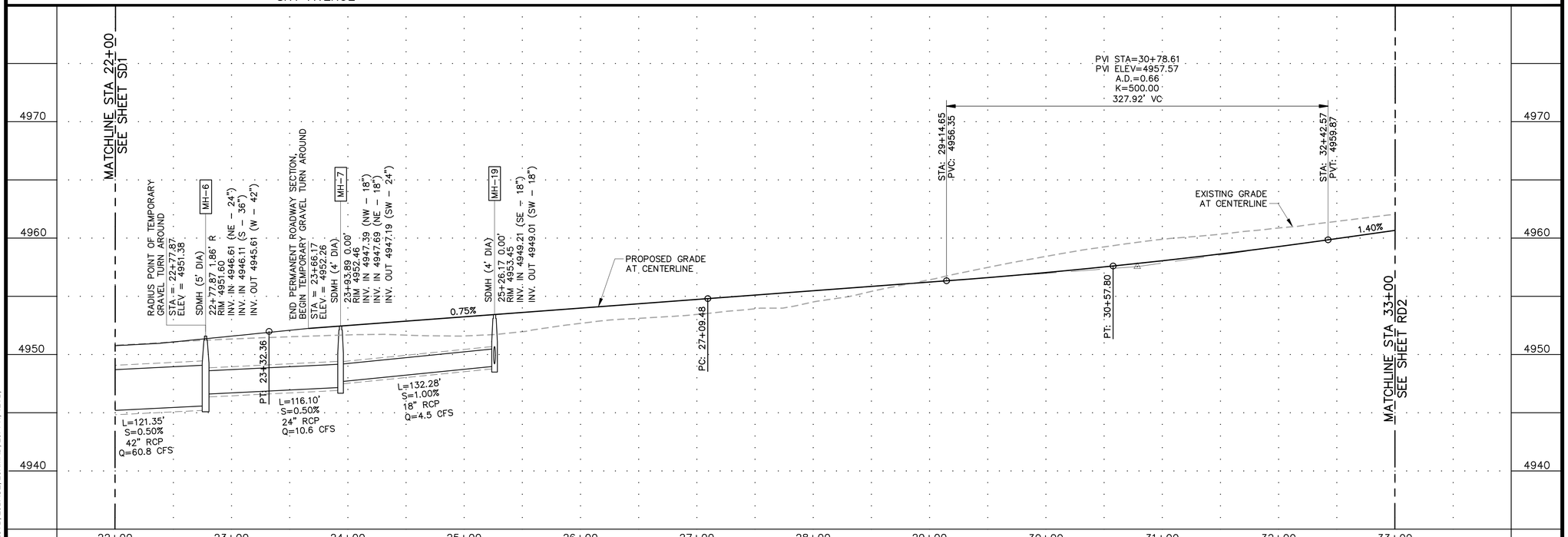

UNCC CALL BEFORE YOU DIG 811 OR 1-800-922-1987

Utility Notification Center of Colorado

DATE	REVISION DESCRIPTION
	6
	5
	4
	3
	2
	1

Drawing Name: 20RD3.dwg
Job Number: EQUINOX MTN SKY
Prepared For: FORT LUPTON

0 25 50 100
1 inch = 50 ft. Horizontal
1 inch = 5 ft Vertical

Designer	Drafter	Checked
BEM	CMM	GLP

Calibre
Calibre Engineering, Inc.
9090 South Ridgeline Boulevard, Suite 105
Highlands Ranch, CO 80129 (303) 730-0434
www.calibre-engineering.com
Construction Management Civil Engineering Surveying

MOUNTAIN SKY

CONSTRUCTION DOCUMENTS - FILING I

ROADWAY PLAN AND PROFILE

Sheet RD3 9 of 50

Date 30 JUNE 2016

PATH: P:\EQUINOX MTN SKY\CADD\CIVIL\20 - FINAL DEVELOPMENT PLAN PHASE I\20RD3.DWG
PLOTTED BY: Ben Murphy PLOT DATE: 8/30/2016 3:33 PM
XREFS: 10PUT, 20PUT, 20TB, 20BASE, 20KMRD, 20PPN, 12TB,

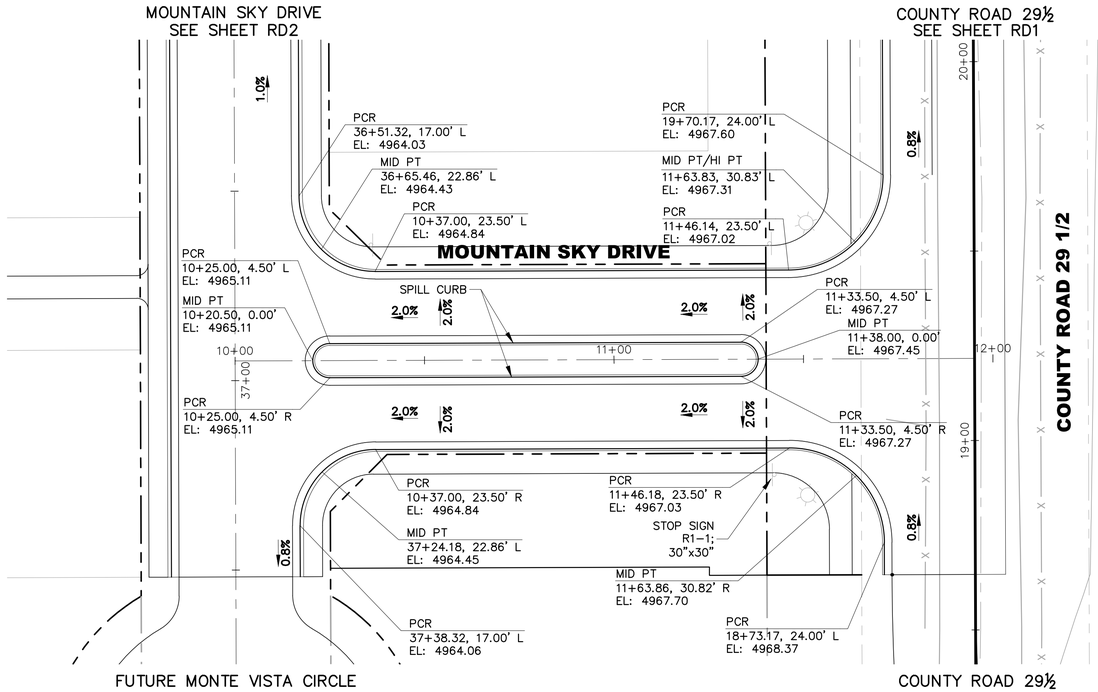

DETAIL IT1 **DETAIL IT2**

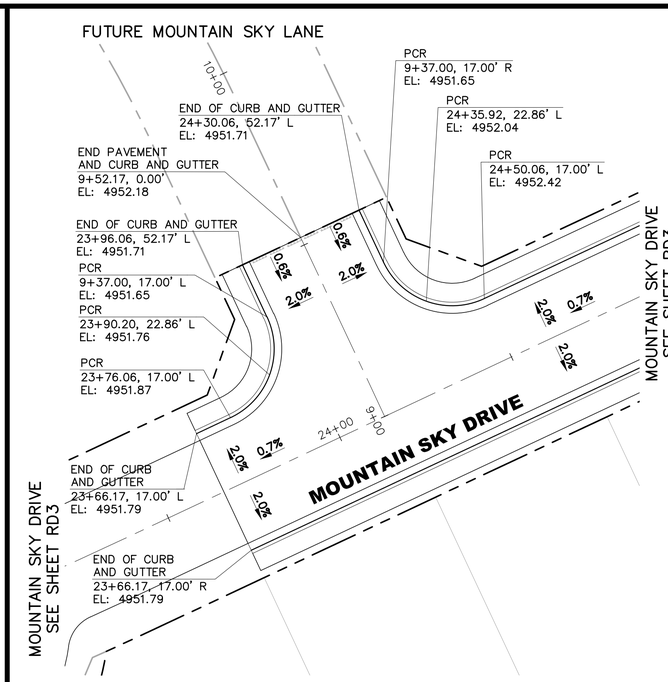

DETAIL IT3

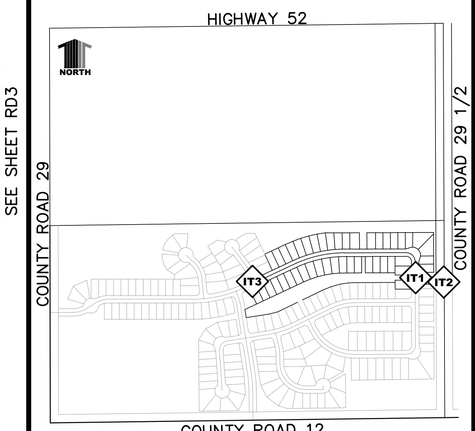

KEYMAP

NOTE: ALL ELEVATIONS REFERENCED HEREON ARE TO FLOWLINE, UNLESS OTHERWISE DENOTED.

PATH: P:\EQUINOX MTN SKY\CADD\CIVIL\20 - FINAL DEVELOPMENT PLAN PHASE I\20IT1.DWG
PLOTTED BY: Ben Murphy PLOT DATE: 6/30/2016 3:34 PM
XREFS: 10EPN, 20TB, 20BASE, 20PPN, 12TB,

DATE	REVISION DESCRIPTION
	6
	5
	4
	3
	2
	1

Drawing Name: 20IT1.dwg
Job Number: EQUINOX MTN SKY
Prepared For: FORT LUPTON
0 10 20 40
1 inch = 20 ft. Horizontal
Designer: BEM | Drafter: BEM | Checked: GLP

Calibre
Calibre Engineering, Inc.
9090 South Ridgeline Boulevard, Suite 105
Highlands Ranch, CO 80129 (303) 730-0434
www.calibre-engineering.com
Construction Management Civil Engineering Surveying

MOUNTAIN SKY
CONSTRUCTION DOCUMENTS - FILING I
INTERSECTION DESIGNS

Sheet **IT1** 10 of 50
Date 30 JUNE 2016

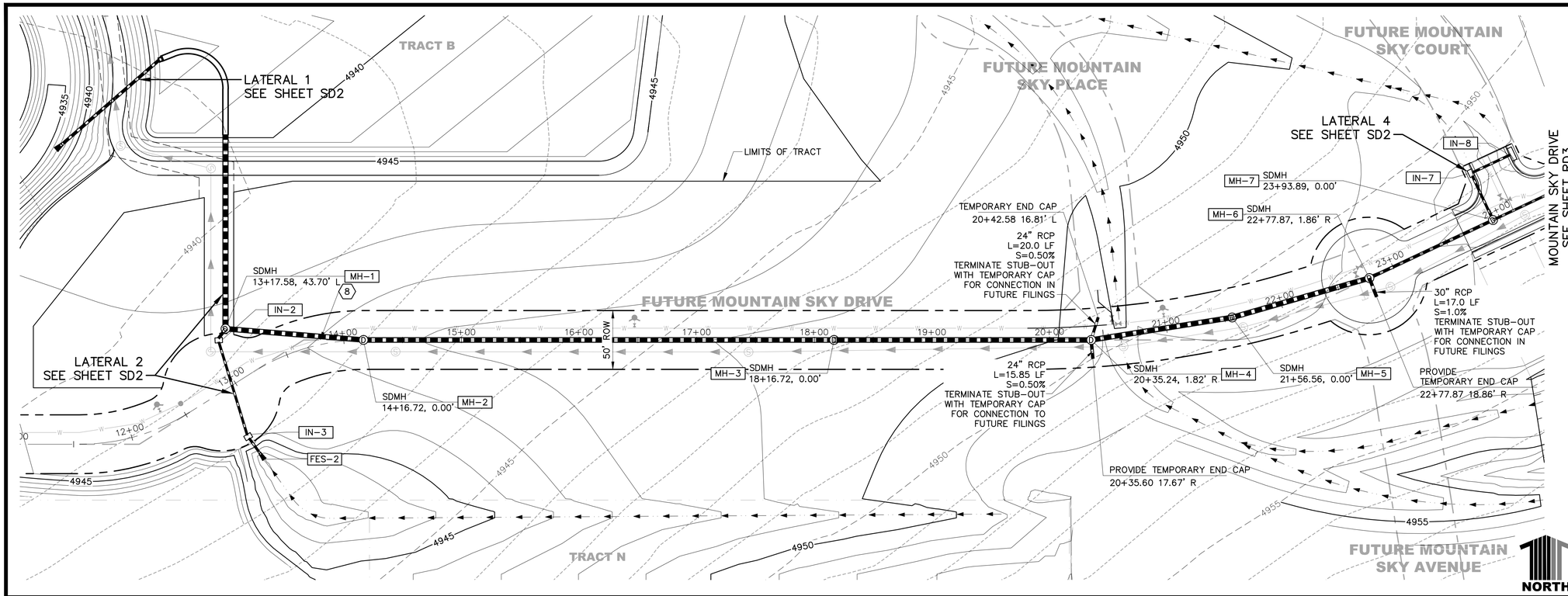

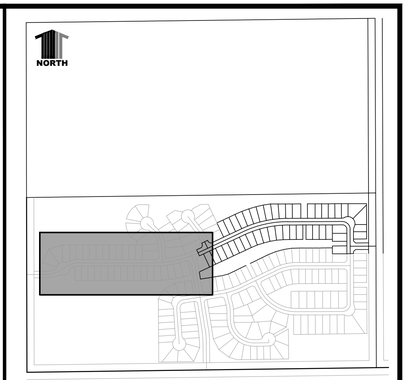

KEYMAP

CONSTRUCTION NOTES:

1. CONSTRUCTION DETAILS AND SPECIFICATIONS SHALL BE PER CITY OF FORT LUPTON, LATEST EDITION UNLESS OTHERWISE NOTED ON THE PLANS.
2. ALL DIMENSIONS ARE TO FLOWLINE, EXCEPT PROFILES, WHICH ARE CENTERLINE DIMENSIONS, OR UNLESS OTHERWISE NOTED.
3. SEE LANDSCAPE PLANS FOR TRAILS/WALKS WITHIN TRACTS

CONSTRUCTION NOTES: STORM DRAIN

1. ALL STORM PIPE AND STRUCTURES SHALL HAVE A MINIMUM OF 10 FT CENTERLINE SEPARATION FROM OTHER UTILITIES AND A MINIMUM 10 FT SEPARATION FROM WATER.
2. CONSTRUCT CURB INLET TYPE R PER CDOT STANDARD DETAIL M-604-12.
3. CONSTRUCTION BOX BASE MANHOLE PER CDOT STANDARD DETAIL M-604-20.
4. CONSTRUCT STORM SEWER OUTLET PER DETAIL ON SHEET DT2.

(1) INDICATES UTILITY CROSSING

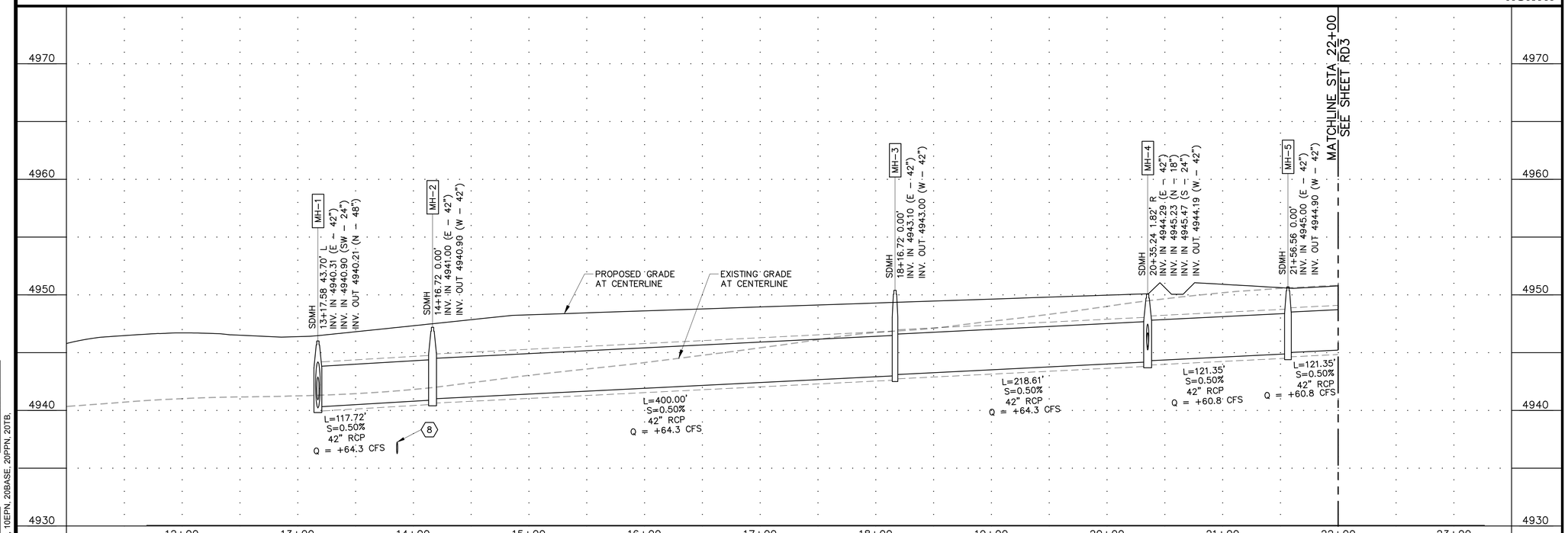

UNCC
CALL BEFORE
YOU DIG
811
OR
1-800-922-1987
Utility Notification
Center of Colorado

DATE	REVISION DESCRIPTION
	6
	5
	4
	3
	2
	1

Drawing Name: 20SD1.dwg
Job Number: EQUINOX MTN SKY
Prepared For: FORT LUPTON
Designer: BEM | Drafter: BEM | Checked: GLP
0 25 50 100
1 inch = 50 ft. Horizontal
1 inch = 5 ft Vertical

Calibre
Calibre Engineering, Inc.
9090 South Ridgeline Boulevard, Suite 105
Highlands Ranch, CO 80129 (303) 730-0434
www.calibre-engineering.com
Construction Management Civil Engineering Surveying

MOUNTAIN SKY
CONSTRUCTION DOCUMENTS - FILING I
STORM SEWER PLAN AND PROFILE

Sheet SD1 11 of 50
Date 30 JUNE 2016

PATH: P:\EQUINOX MTN SKY\CADD\CIVIL\20 - FINAL DEVELOPMENT PLAN PHASE I\20SD1.DWG
PLOTTED BY: Ben Murphy PLOT DATE: 6/30/2016 3:35 PM
XREFS: 10PUT, 20KMSD, 10EPN, 20BASE, 20PPN, 20TB,

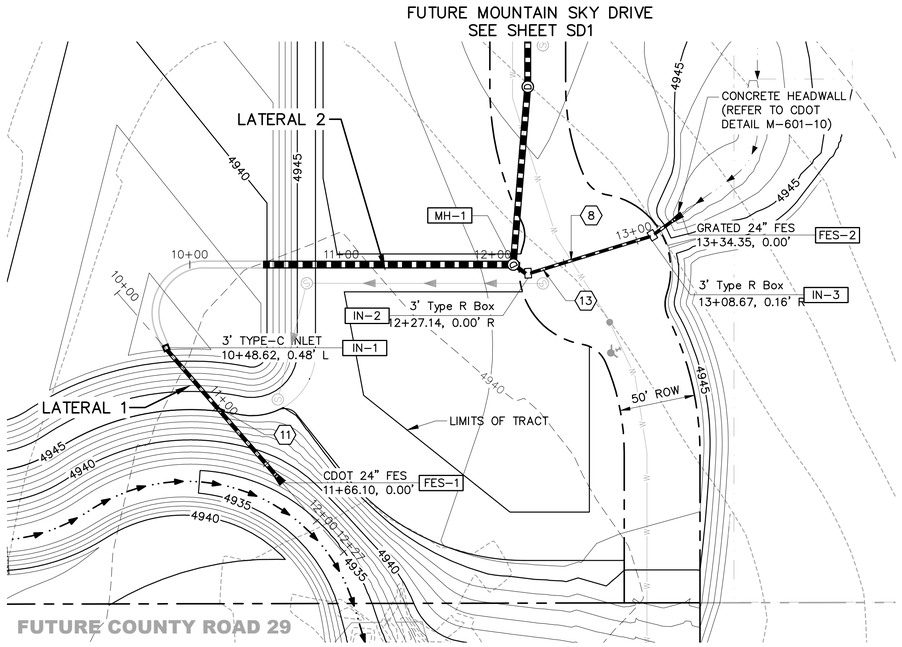

UTILITY CROSSINGS						
NO.	DESC	ELEV	OVER/ UNDER	DESC	ELEV	CLEARANCE
11	STORM	BOP= 4936.50	OVER	SANITARY	TOP= 4935.69	0.81'
12	WATER	BOP= 4938.87	OVER	SANITARY	TOP= 4933.97	4.90'

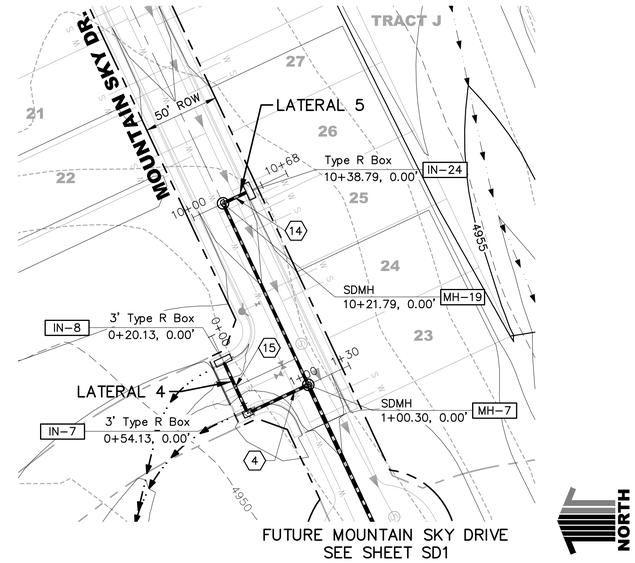

UTILITY CROSSINGS						
NO.	DESC	ELEV	OVER/ UNDER	DESC	ELEV	CLEARANCE
4	STORM	BOP= 4947.18	OVER	WATER	TOP= 4944.19	2.99'
8	STORM	BOP= 4940.52	OVER	WATER	TOP= 4937.30	3.22'
13	STORM	BOP= 4940.36	OVER	SANITARY	TOP= 4937.11	3.25'
11	STORM	BOP= 4936.5	OVER	SANITARY	TOP= 4933.97	2.53'
14	STORM	BOP= 4949.09	OVER	SANITARY	TOP= 4942.31	6.78'
15	STORM	BOP= 4947.68	OVER	WATER	TOP= 4944.68	3.00'

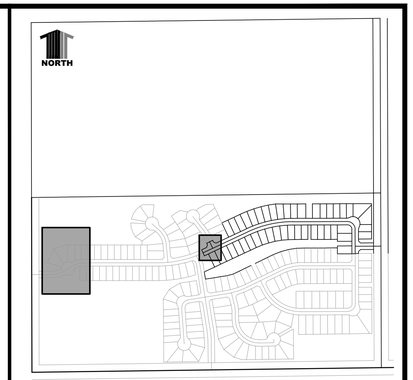

KEYMAP

CONSTRUCTION NOTES:

1. CONSTRUCTION DETAILS AND SPECIFICATIONS SHALL BE PER CITY OF FORT LUPTON, LATEST EDITION UNLESS OTHERWISE NOTED ON THE PLANS.
2. ALL DIMENSIONS ARE TO FLOWLINE, EXCEPT PROFILES, WHICH ARE CENTERLINE DIMENSIONS, OR UNLESS OTHERWISE NOTED.
3. SEE LANDSCAPE PLANS FOR TRAILS/WALKS WITHIN TRACTS

CONSTRUCTION NOTES: STORM DRAIN

1. ALL STORM PIPE AND STRUCTURES SHALL HAVE A MINIMUM OF 10 FT CENTERLINE SEPARATION FROM OTHER UTILITIES AND A MINIMUM 10 FT SEPARATION FROM WATER.
2. CONSTRUCT CURB INLET TYPE R PER CDOT STANDARD DETAIL M-604-12.
3. CONSTRUCTION BOX BASE MANHOLE PER CDOT STANDARD DETAIL M-604-20.
4. CONSTRUCT STORM SEWER OUTLET PER DETAIL ON SHEET DT2.

(1) INDICATES UTILITY CROSSING

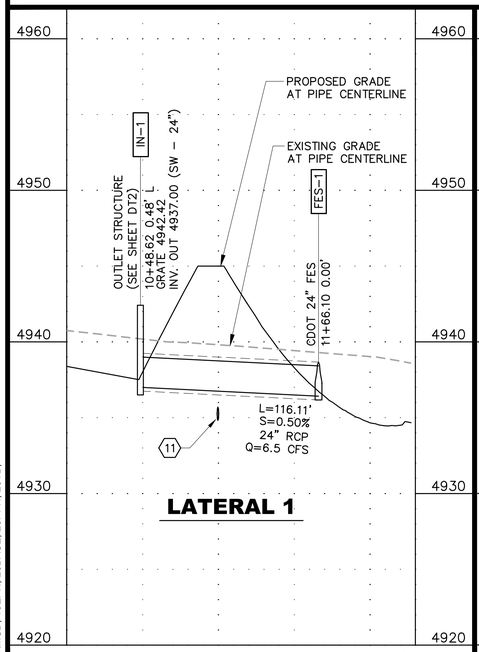

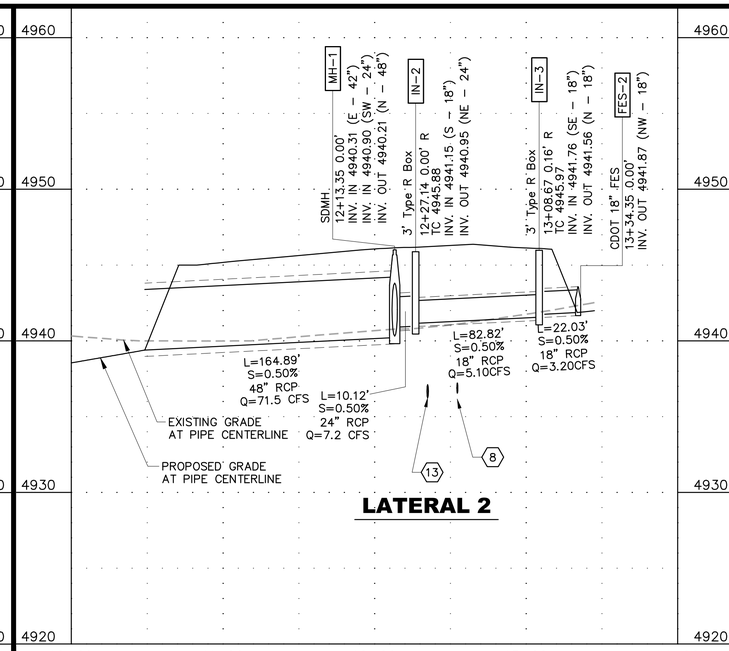

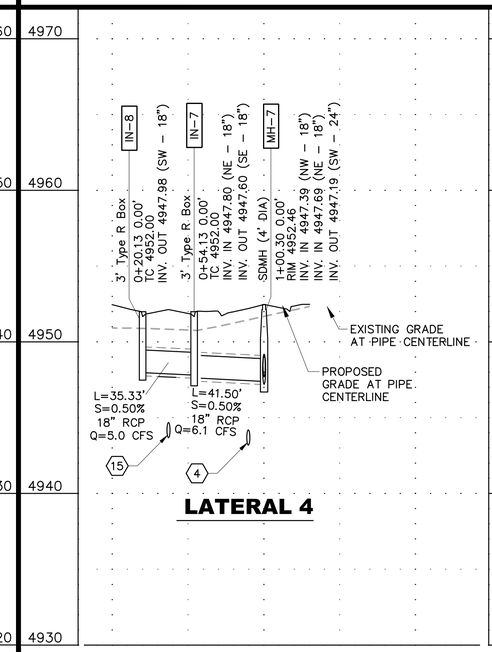

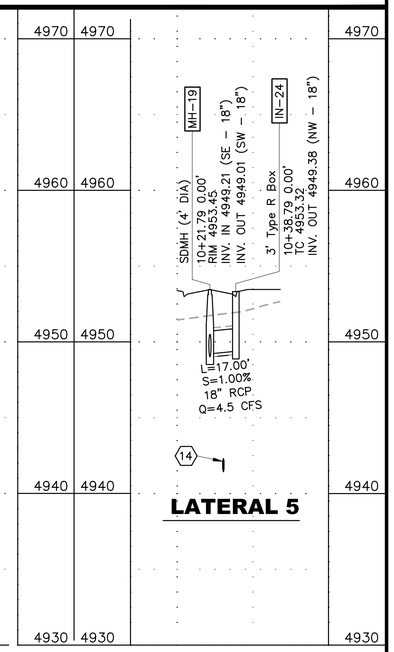

UNCC
CALL BEFORE
YOU DIG
811
OR
1-800-922-1987
Utility Notification
Center of Colorado

DATE	REVISION DESCRIPTION
	6
	5
	4
	3
	2
	1

Drawing Name: 20SD2.dwg
Job Number: EQUINOX MTN SKY
Prepared For: FORT LUPTON
Designer: BEM | Drafter: BEM | Checked: GLP

0 25 50 100
1 inch = 50 ft. Horizontal
1 inch = 5 ft Vertical

Calibre
Calibre Engineering, Inc.
9090 South Ridgeline Boulevard, Suite 105
Highlands Ranch, CO 80129 (303) 730-0434
www.calibre-engineering.com
Construction Management Civil Engineering Surveying

MOUNTAIN SKY
CONSTRUCTION DOCUMENTS - FILING I
STORM SEWER PLAN AND PROFILE

Sheet SD2 | 12 of 50
Date 30 JUNE 2016

PATH: P:\EQUINOX MTN SKY\CADD\CIVIL\20 - FINAL DEVELOPMENT PLAN PHASE I\20SD2.DWG
PLOTTED BY: Ben Murphy PLOT DATE: 6/30/2016 3:36 PM
XREFS: 20PUT, 10PUT, 20KMSD, 10EPN, 20BASE, 20PPN, 20TB,

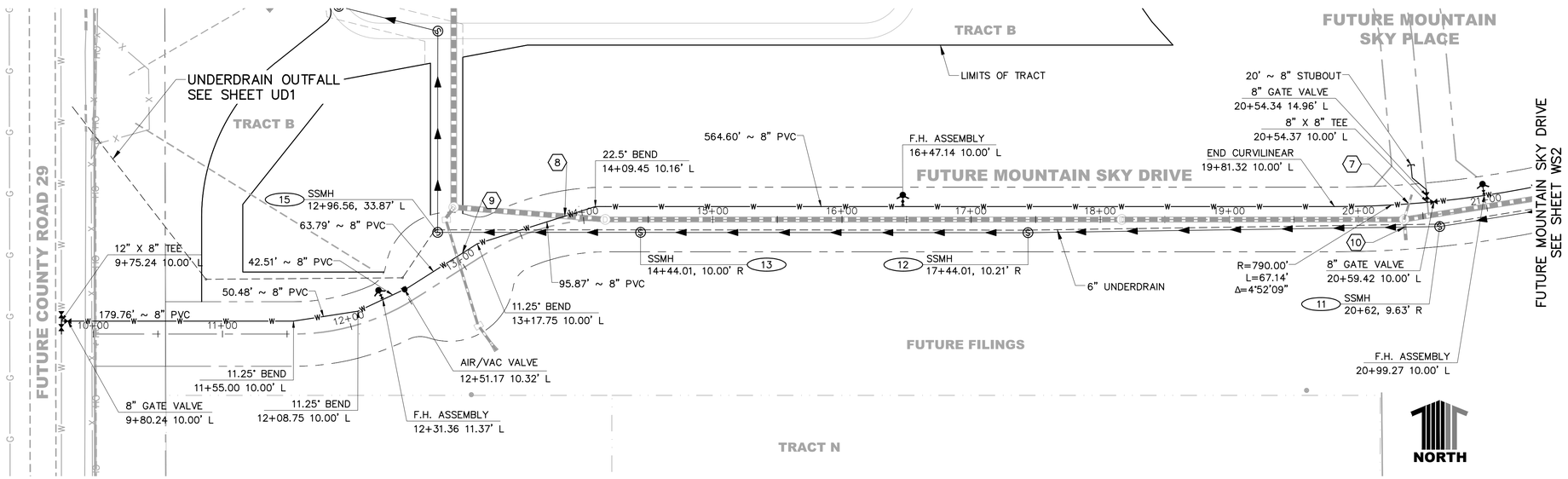

UTILITY CROSSINGS						
NO.	DESC	ELEV	OVER/ UNDER	DESC	ELEV	CLEARANCE
7	STORM	BOP= 4945.03	OVER	WATER	TOP= 4942.08	2.95'
8	STORM	BOP= 4940.52	OVER	WATER	TOP= 4937.30	3.22'
9	STORM	BOP= 4941.13	OVER	WATER	TOP= 4938.08	3.05'
10	STORM	BOP 4945.51	OVER	SANITARY	TOP= 4939.75	5.76'

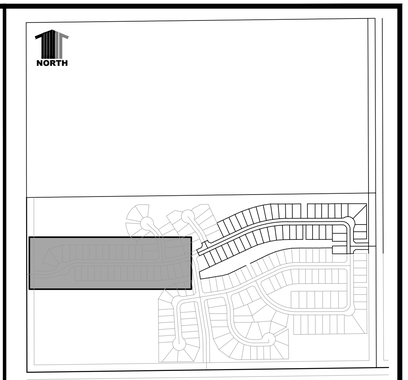

KEYMAP

CONSTRUCTION NOTES:

1. CONSTRUCTION DETAILS AND SPECIFICATIONS SHALL BE PER CITY OF FORT LUPTON, LATEST EDITION UNLESS OTHERWISE NOTED.
2. ALL DIMENSIONS ARE TO FLOWLINE, EXCEPT PROFILES, WHICH ARE CENTERLINE DIMENSIONS, OR UNLESS OTHERWISE NOTED
3. CONTRACTOR SHALL NOTIFY PUBLIC WORKS UTILITIES DIVISION 48 HOURS IN ADVANCE OF COMMENCEMENT OF WORK.

LEGEND

- PROP. WATER MAIN
- PROP. SANITARY SEWER MAIN
- PROP. STORM DRAIN
- PROP. WATER VALVE
- PROP. FIRE HYDRANT
- PROP. STORM DRAIN INLET
- SANITARY SEWER MANHOLE NUMBER (16)
- EX. WATER MAIN
- EX. SANITARY SEWERS
- EX. STORM DRAIN
- EX. UNDERGROUND ELECTRIC
- EX. UNDERGROUND TELEPHONE
- EX. GAS MAIN
- EX. WATER VALVE
- EX. FIRE HYDRANT
- EX. STORM DRAIN INLET
- EX. POWER POLE
- (1) INDICATES UTILITY CROSSING (SEE TABLE ON THIS SHEET)

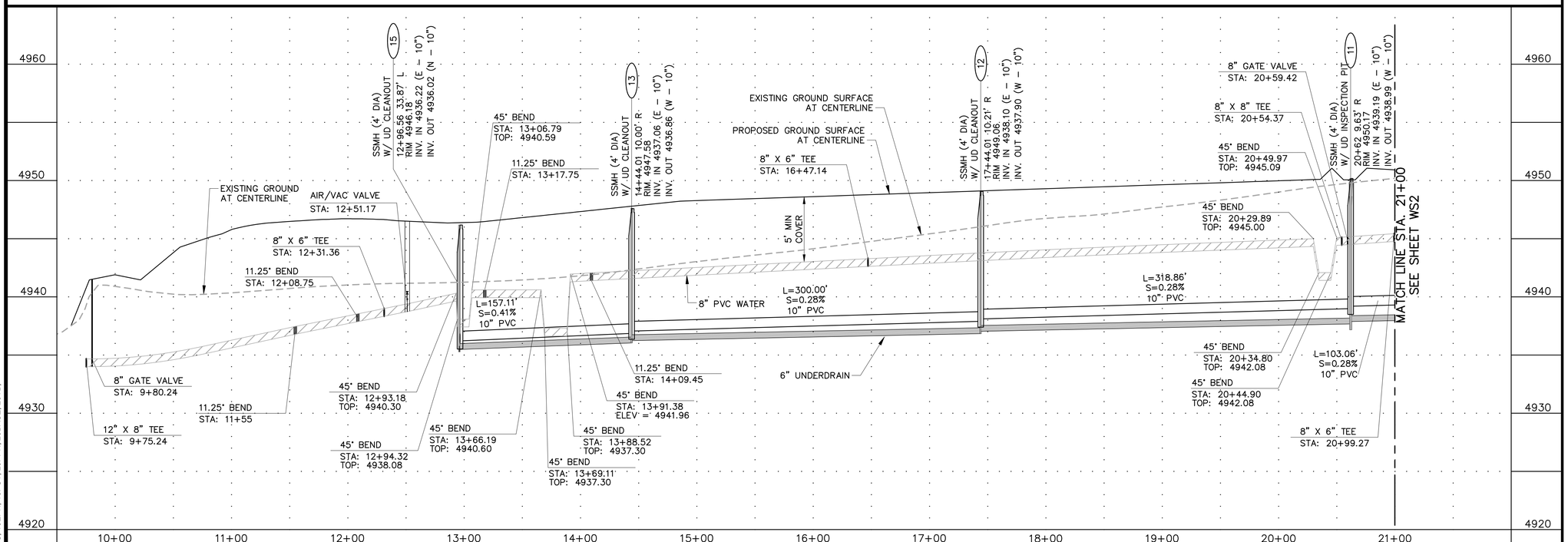

UNCC CALL BEFORE YOU DIG
811
OR
1-800-922-1987
Utility Notification Center of Colorado

DATE	REVISION DESCRIPTION
6	
5	
4	
3	
2	
1	

Drawing Name: 20SW1.dwg
Job Number: EQUINOX MTN SKY
Prepared For: FORT LUPTON
Designer: BEM | Drafter: BEM | Checked: GLP
1 inch = 50 ft. Horizontal
1 inch = 5 ft Vertical

Calibre
Calibre Engineering, Inc.
9090 South Ridgeline Boulevard, Suite 105
Highlands Ranch, CO 80129 (303) 730-0434
www.calibre-engineering.com
Construction Management Civil Engineering Surveying

MOUNTAIN SKY
CONSTRUCTION DOCUMENTS - FILING I
WATER AND SANITARY PLAN AND PROFILE

Sheet WS1 — 13 of 50
Date 30 JUNE 2016

PATH: P:\EQUINOX MTN SKY\CADD\CIVIL\20 - FINAL DEVELOPMENT PLAN PHASE I\20SW1.DWG
PLOTTED BY: Ben Murphy PLOT DATE: 6/30/2016 3:37 PM
XREFS: 10EUT, 20KMWS, 10EPN, 10PUT, 20PPN, 20BASE, 20TB,

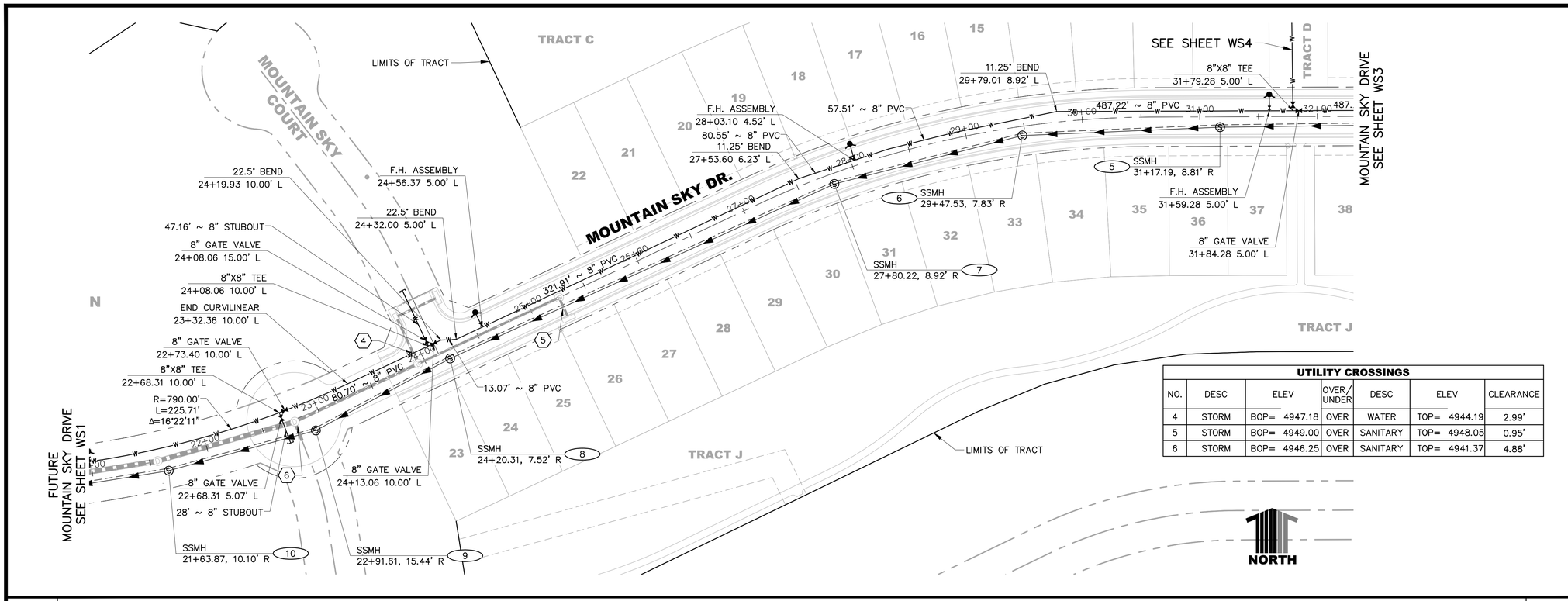

UTILITY CROSSINGS						
NO.	DESC	ELEV	OVER/ UNDER	DESC	ELEV	CLEARANCE
4	STORM	BOP= 4947.18	OVER	WATER	TOP= 4944.19	2.99'
5	STORM	BOP= 4949.00	OVER	SANITARY	TOP= 4948.05	0.95'
6	STORM	BOP= 4946.25	OVER	SANITARY	TOP= 4941.37	4.88'

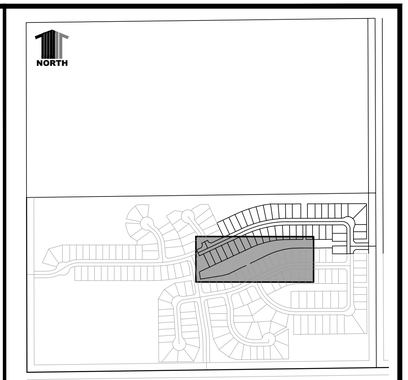

KEYMAP

CONSTRUCTION NOTES:

1. CONSTRUCTION DETAILS AND SPECIFICATIONS SHALL BE PER CITY OF FORT LUPTON, LATEST EDITION UNLESS OTHERWISE NOTED.
2. ALL DIMENSIONS ARE TO FLOWLINE, EXCEPT PROFILES, WHICH ARE CENTERLINE DIMENSIONS, OR UNLESS OTHERWISE NOTED
3. CONTRACTOR SHALL NOTIFY PUBLIC WORKS UTILITIES DIVISION 48 HOURS IN ADVANCE OF COMMENCEMENT OF WORK.

LEGEND

- PROP. WATER MAIN
- PROP. SANITARY SEWER MAIN
- PROP. STORM DRAIN
- PROP. WATER VALVE
- PROP. FIRE HYDRANT
- PROP. STORM DRAIN INLET
- SANITARY SEWER MANHOLE NUMBER (16)
- EX. WATER MAIN
- EX. SANITARY SEWERS
- EX. STORM DRAIN
- EX. UNDERGROUND ELECTRIC
- EX. UNDERGROUND TELEPHONE
- EX. GAS MAIN
- EX. WATER VALVE
- EX. FIRE HYDRANT
- EX. STORM DRAIN INLET
- EX. POWER POLE
- (3) INDICATES UTILITY CROSSING (SEE TABLE ON THIS SHEET)

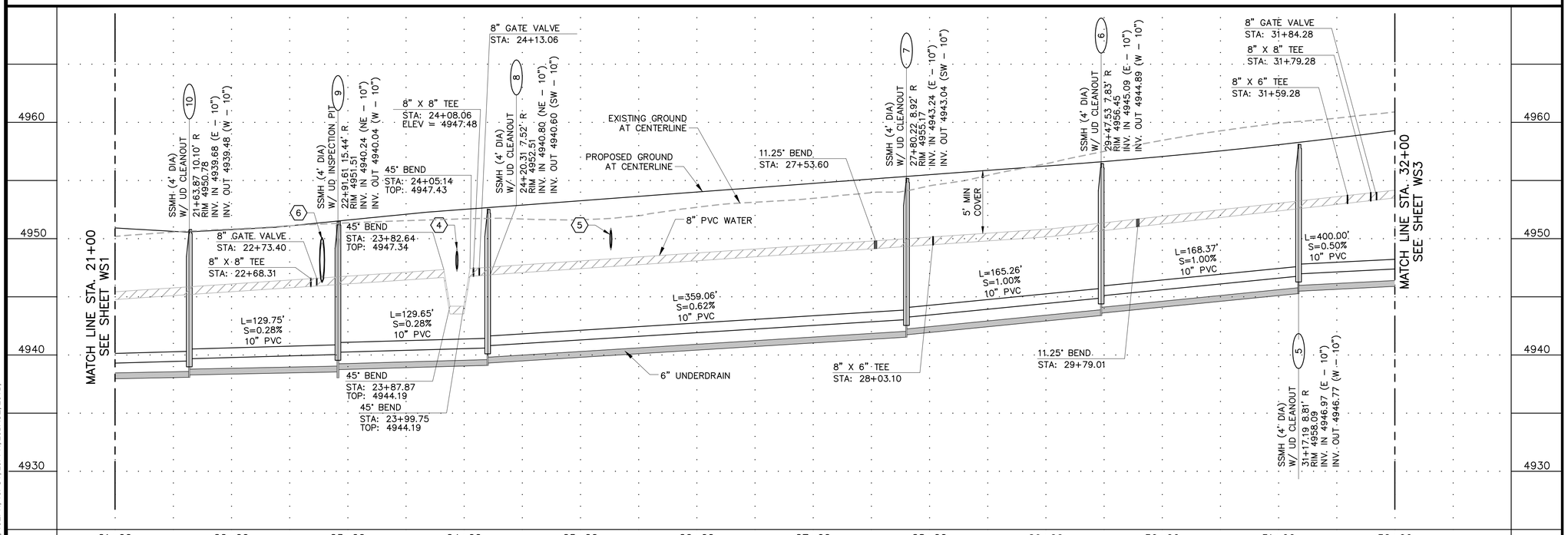

UNCC
CALL BEFORE YOU DIG
811
OR
1-800-922-1987
Utility Notification Center of Colorado

DATE	REVISION DESCRIPTION
	6
	5
	4
	3
	2
	1

Drawing Name: 20SW1.dwg
Job Number: EQUINOX MTN SKY
Prepared For: FORT LUPTON

0 25 50 100
1 inch = 50 ft. Horizontal
1 inch = 5 ft Vertical

Designer	Drafter	Checked
BEM	BEM	GLP

Calibre
Calibre Engineering, Inc.
9090 South Ridgeline Boulevard, Suite 105
Highlands Ranch, CO 80129 (303) 730-0434
www.calibre-engineering.com
Construction Management Civil Engineering Surveying

MOUNTAIN SKY
CONSTRUCTION DOCUMENTS - FILING I
WATER AND SANITARY PLAN AND PROFILE

Sheet WS2 14 of 50
Date 30 JUNE 2016

PATH: P:\EQUINOX MTN SKY\CADD\CIVIL\20 - FINAL DEVELOPMENT PLAN PHASE I\20SW1.DWG
PLOTTED BY: Ben Murphy PLOT DATE: 6/30/2016 3:38 PM
XREFS: 10EUT, 20KMWS, 10EPN, 10PUT, 20PPN, 20BASE, 20TB,

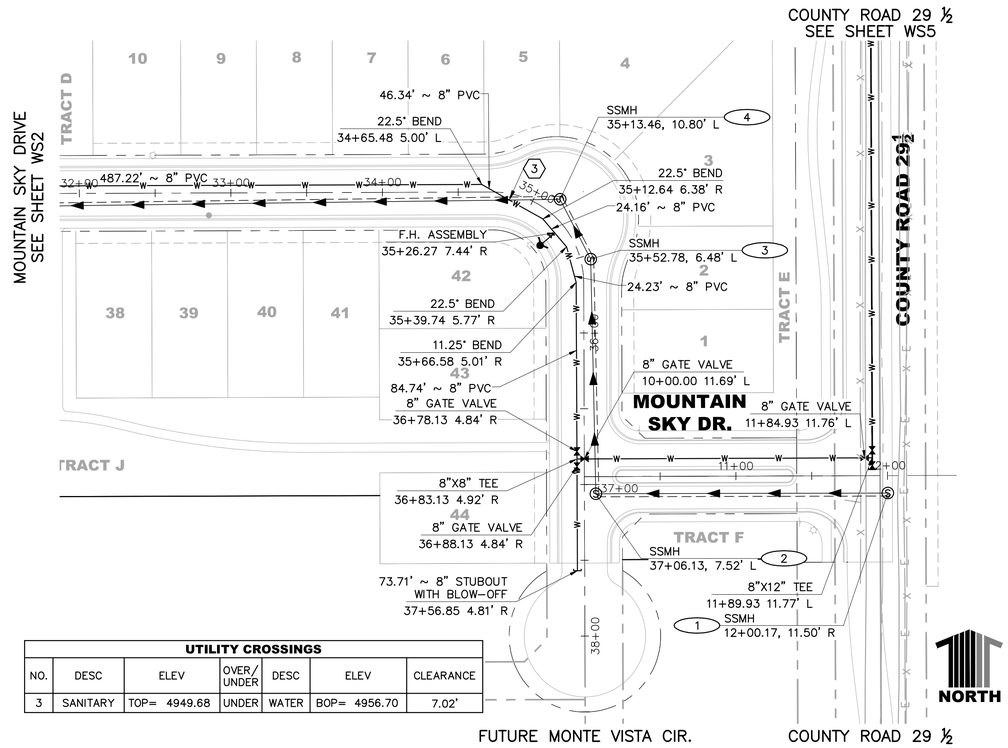

UTILITY CROSSINGS						
NO.	DESC	ELEV	OVER/ UNDER	DESC	ELEV	CLEARANCE
3	SANITARY	TOP= 4949.68	UNDER	WATER	BOP= 4956.70	7.02'

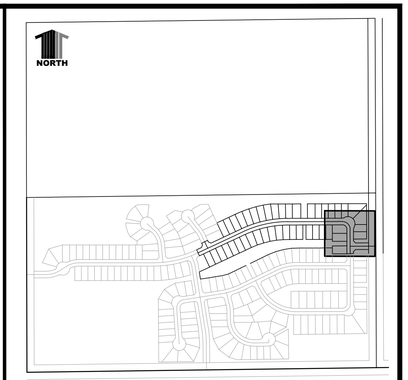

KEYMAP

CONSTRUCTION NOTES:

1. CONSTRUCTION DETAILS AND SPECIFICATIONS SHALL BE PER CITY OF FORT LUPTON, LATEST EDITION UNLESS OTHERWISE NOTED.
2. ALL DIMENSIONS ARE TO FLOWLINE, EXCEPT PROFILES, WHICH ARE CENTERLINE DIMENSIONS, OR UNLESS OTHERWISE NOTED
3. CONTRACTOR SHALL NOTIFY PUBLIC WORKS UTILITIES DIVISION 48 HOURS IN ADVANCE OF COMMENCEMENT OF WORK.

LEGEND

- PROP. WATER MAIN
- PROP. SANITARY SEWER MAIN
- PROP. STORM DRAIN
- PROP. WATER VALVE
- PROP. FIRE HYDRANT
- PROP. STORM DRAIN INLET
- SANITARY SEWER MANHOLE NUMBER (16)
- EX. WATER MAIN
- EX. SANITARY SEWERS
- EX. STORM DRAIN
- EX. UNDERGROUND ELECTRIC
- EX. UNDERGROUND TELEPHONE
- EX. GAS MAIN
- EX. WATER VALVE
- EX. FIRE HYDRANT
- EX. STORM DRAIN INLET
- EX. POWER POLE
- (3) INDICATES UTILITY CROSSING (SEE TABLE ON THIS SHEET)

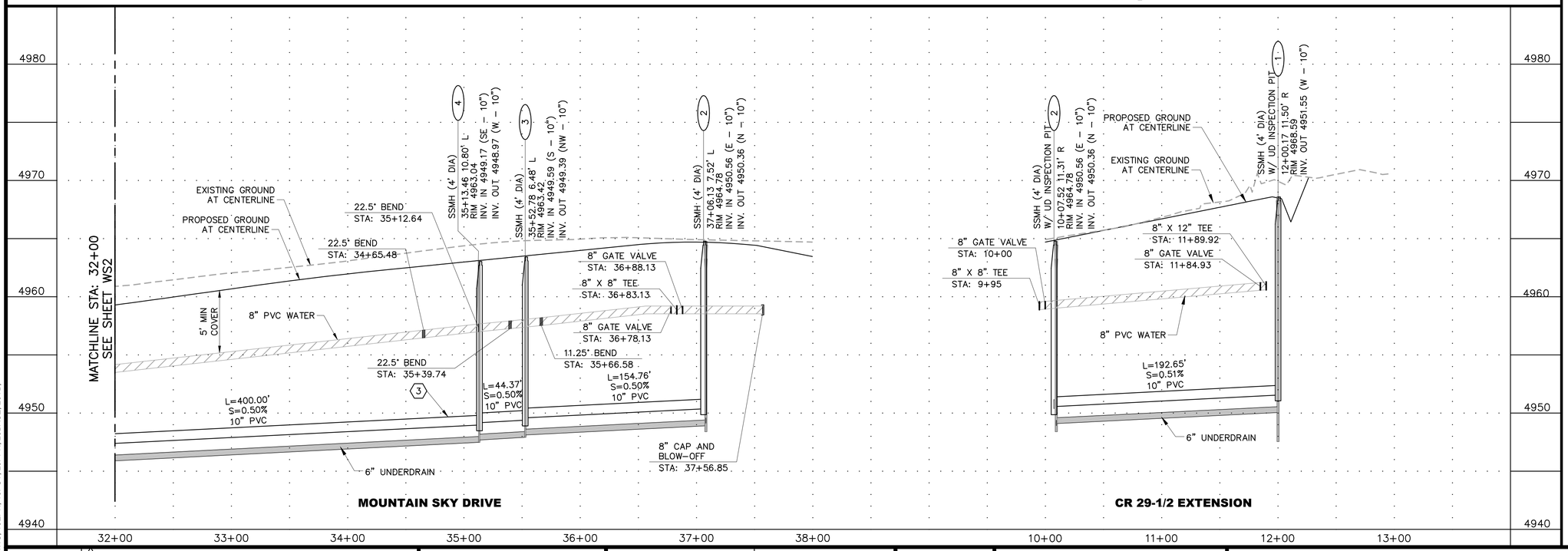

UNCC
CALL BEFORE
YOU DIG
811
OR
1-800-922-1987
Utility Notification
Center of Colorado

DATE	REVISION DESCRIPTION
	6
	5
	4
	3
	2
	1

Drawing Name: 20SW1.dwg
Job Number: EQUINOX MTN SKY
Prepared For: FORT LUPTON
Designer: BEM | Drafter: BEM | Checked: GLP
0 25 50 100
1 inch = 50 ft. Horizontal
1 inch = 5 ft Vertical

Calibre
Calibre Engineering, Inc.
9090 South Ridgeline Boulevard, Suite 105
Highlands Ranch, CO 80129 (303) 730-0434
www.calibre-engineering.com
Construction Management Civil Engineering Surveying

MOUNTAIN SKY
CONSTRUCTION DOCUMENTS - FILING I
WATER AND SANITARY PLAN AND PROFILE

Sheet WS3 of 15 / 50
Date 30 JUNE 2016

PATH: P:\EQUINOX MTN SKY\CADD\CIVIL\20 - FINAL DEVELOPMENT PLAN PHASE I\20SW1.DWG
PLOTTED BY: Ben Murphy PLOT DATE: 6/30/2016 3:38 PM
XREFS: 10EUT, 20KMWS, 10EPN, 10PUT, 20PPN, 20BASE, 20TB,

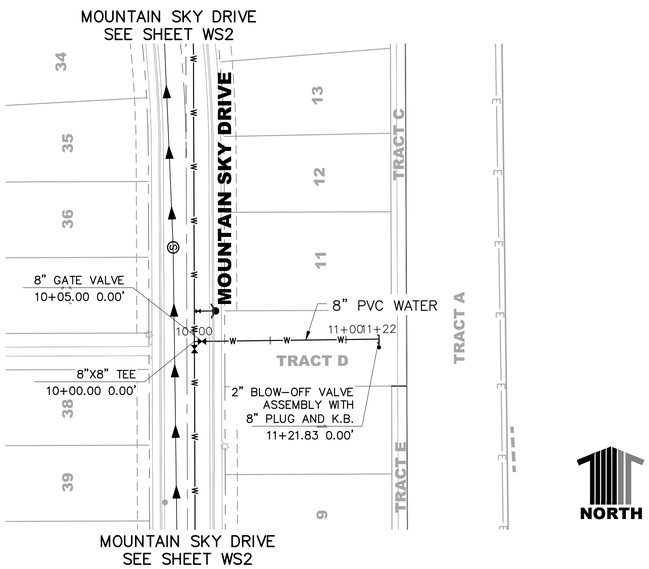

NORTH

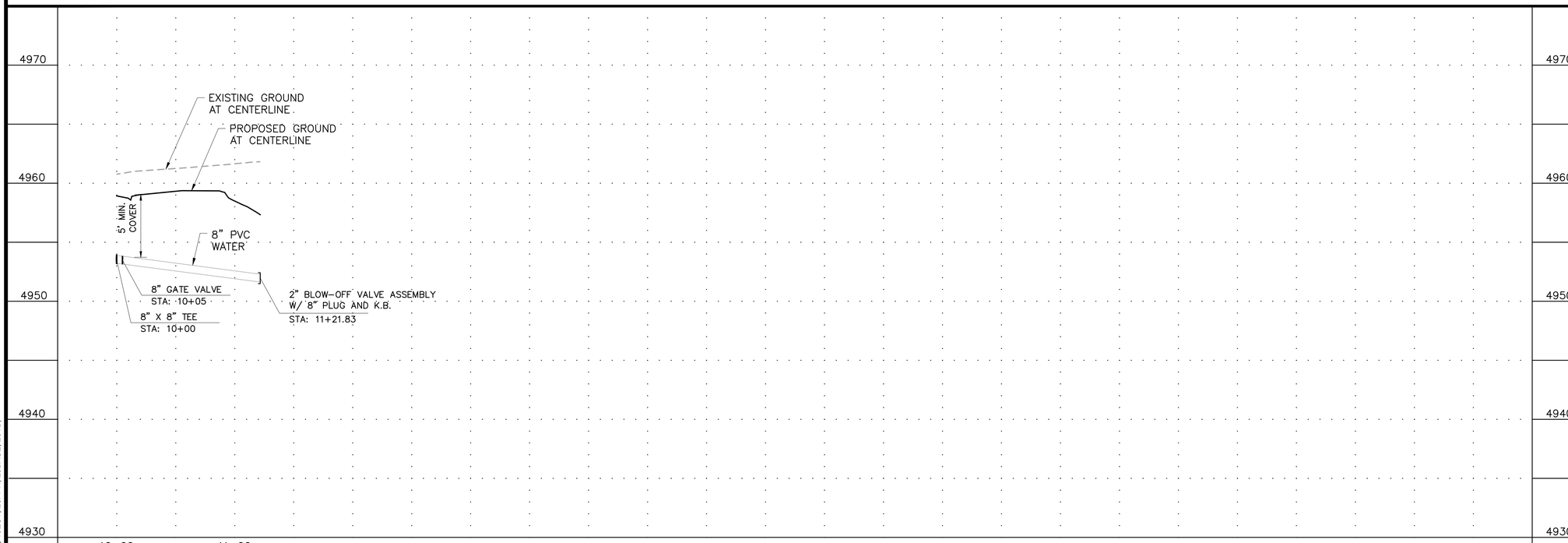

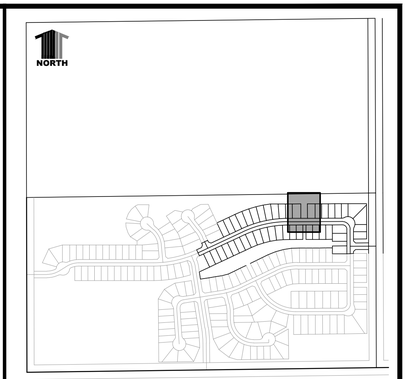

KEYMAP

CONSTRUCTION NOTES:

1. CONSTRUCTION DETAILS AND SPECIFICATIONS SHALL BE PER CITY OF FORT LUPTON, LATEST EDITION UNLESS OTHERWISE NOTED.
2. ALL DIMENSIONS ARE TO FLOWLINE, EXCEPT PROFILES, WHICH ARE CENTERLINE DIMENSIONS, OR UNLESS OTHERWISE NOTED
3. CONTRACTOR SHALL NOTIFY PUBLIC WORKS UTILITIES DIVISION 48 HOURS IN ADVANCE OF COMMENCEMENT OF WORK.

LEGEND

PROP. WATER MAIN
PROP. SANITARY SEWER MAIN
PROP. STORM DRAIN
PROP. WATER VALVE
PROP. FIRE HYDRANT
PROP. STORM DRAIN INLET
SANITARY SEWER MANHOLE NUMBER (16)
EX. WATER MAIN
EX. SANITARY SEWERS
EX. STORM DRAIN
EX. UNDERGROUND ELECTRIC
EX. UNDERGROUND TELEPHONE
EX. GAS MAIN
EX. WATER VALVE
EX. FIRE HYDRANT
EX. STORM DRAIN INLET
EX. POWER POLE
(1) INDICATES UTILITY CROSSING

811 UNCC CALL BEFORE YOU DIG 811 OR 1-800-922-1987
Utility Notification Center of Colorado

DATE	REVISION DESCRIPTION
	6
	5
	4
	3
	2
	1

Drawing Name: 20SW4.dwg
Job Number: EQUINOX MTN SKY
Prepared For: FORT LUPTON
Designer: BEM | Drafter: BEM | Checked: GLP
0 25 50 100
1 inch = 50 ft. Horizontal
1 inch = 5 ft Vertical

Calibre
Calibre Engineering, Inc.
9090 South Ridgeline Boulevard, Suite 105
Highlands Ranch, CO 80129 (303) 730-0434
www.calibre-engineering.com
Construction Management Civil Engineering Surveying

MOUNTAIN SKY
CONSTRUCTION DOCUMENTS - FILING I
WATER AND SANITARY PLAN AND PROFILE

Sheet WS4 16 of 50
Date 30 JUNE 2016

PATH: P:\EQUINOX MTN SKY\CADD\CIVIL\20 - FINAL DEVELOPMENT PLAN PHASE I\20SW4.DWG
PLOTTED BY: Ben Murphy PLOT DATE: 6/30/2016 3:39 PM
XREFS: 20KMWS, 10PUT, 10EUT, 20PPN, 20BASE, 20TB,

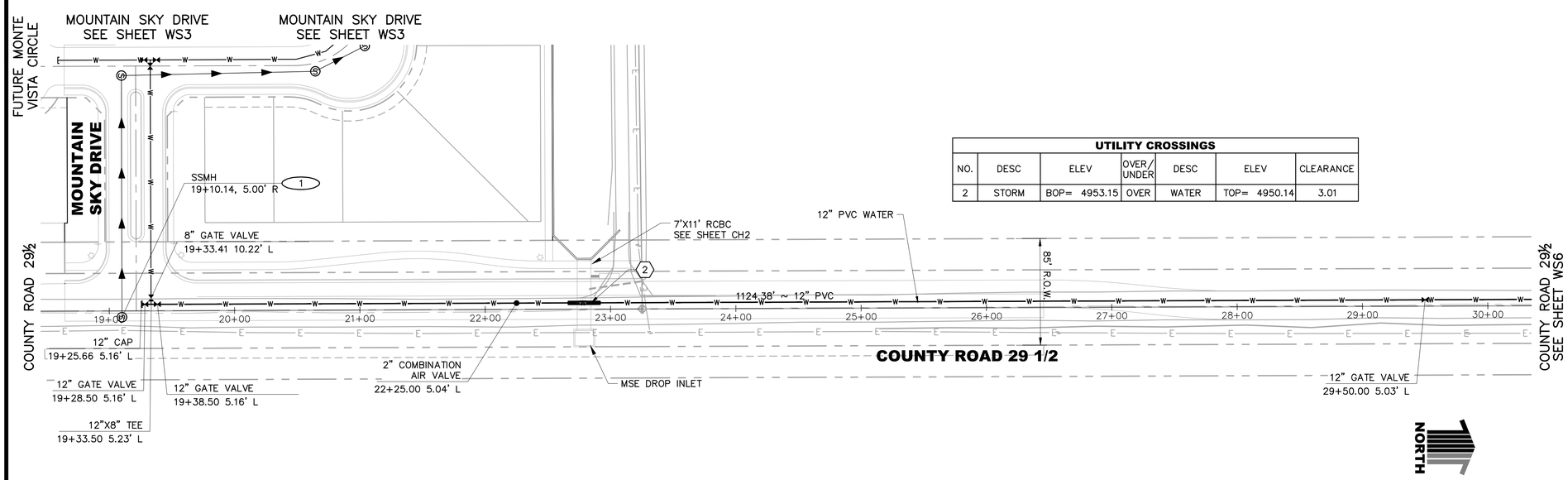

UTILITY CROSSINGS

NO.	DESC	ELEV	OVER/ UNDER	DESC	ELEV	CLEARANCE
2	STORM	BOP= 4953.15	OVER	WATER	TOP= 4950.14	3.01

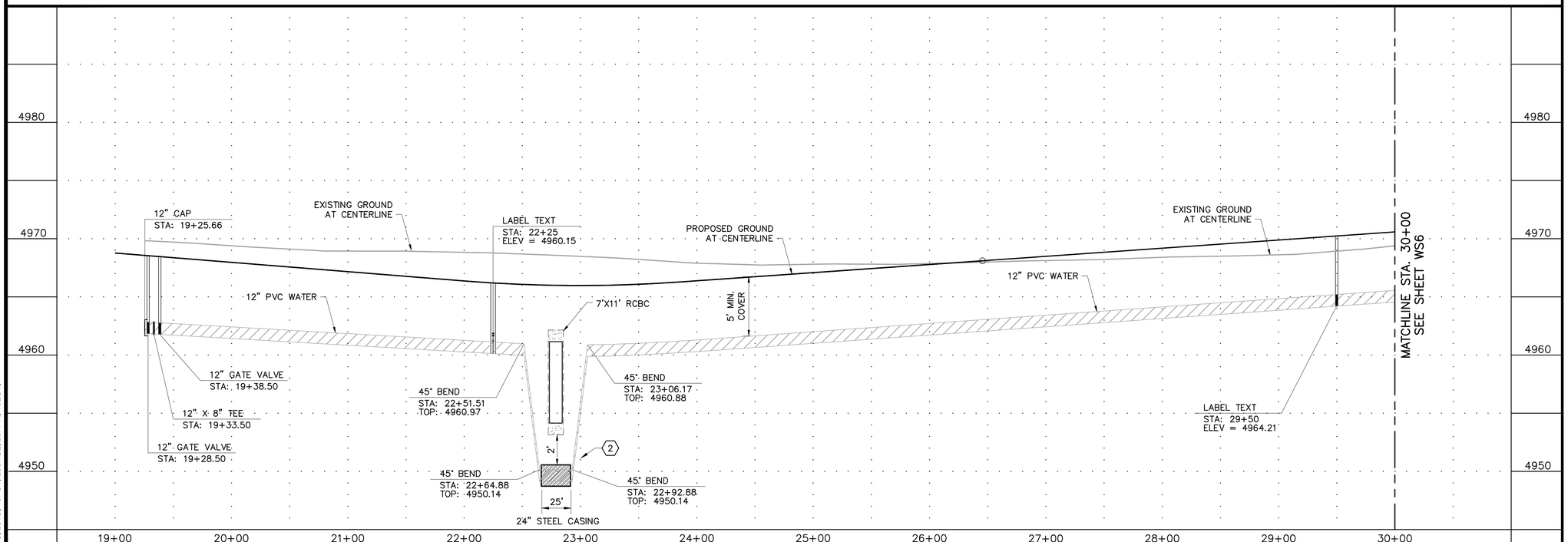

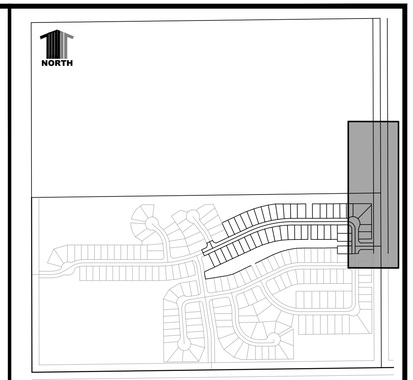

KEYMAP

CONSTRUCTION NOTES:

1. CONSTRUCTION DETAILS AND SPECIFICATIONS SHALL BE PER CITY OF FORT LUPTON, LATEST EDITION UNLESS OTHERWISE NOTED.
2. ALL DIMENSIONS ARE TO FLOWLINE, EXCEPT PROFILES, WHICH ARE CENTERLINE DIMENSIONS, OR UNLESS OTHERWISE NOTED
3. CONTRACTOR SHALL NOTIFY PUBLIC WORKS UTILITIES DIVISION 48 HOURS IN ADVANCE OF COMMENCEMENT OF WORK.

LEGEND

PROP. WATER MAIN
PROP. SANITARY SEWER MAIN
PROP. STORM DRAIN
PROP. WATER VALVE
PROP. FIRE HYDRANT
PROP. STORM DRAIN INLET
SANITARY SEWER MANHOLE NUMBER (16)
EX. WATER MAIN
EX. SANITARY SEWERS
EX. STORM DRAIN
EX. UNDERGROUND ELECTRIC
EX. UNDERGROUND TELEPHONE
EX. GAS MAIN
EX. WATER VALVE
EX. FIRE HYDRANT
EX. STORM DRAIN INLET
EX. POWER POLE
(1) INDICATES UTILITY CROSSING

811 UNCC CALL BEFORE YOU DIG 811 OR 1-800-922-1987 Utility Notification Center of Colorado

DATE	REVISION DESCRIPTION
	6
	5
	4
	3
	2
	1

Drawing Name: 20SW5.dwg
Job Number: EQUINOX MTN SKY
Prepared For: FORT LUPTON
Designer: BEM | Drafter: BEM | Checked: GLP
1 inch = 50 ft. Horizontal
1 inch = 5 ft Vertical

Calibre
Calibre Engineering, Inc.
9090 South Ridgeline Boulevard, Suite 105
Highlands Ranch, CO 80129 (303) 730-0434
www.calibre-engineering.com
Construction Management Civil Engineering Surveying

MOUNTAIN SKY
CONSTRUCTION DOCUMENTS - FILING I
WATER AND SANITARY PLAN AND PROFILE

Sheet WS5 17 of 50
Date 30 JUNE 2016

PATH: P:\EQUINOX MTN SKY\CADD\CIVIL\20 - FINAL DEVELOPMENT PLAN PHASE I\20SW5.DWG
PLOTTED BY: Ben Murphy PLOT DATE: 6/30/2016 3:40 PM
XREFS: 10EPN, 20KMWS, 20TB, 10PUT, 20BASE, 20PPN, 10EUT,

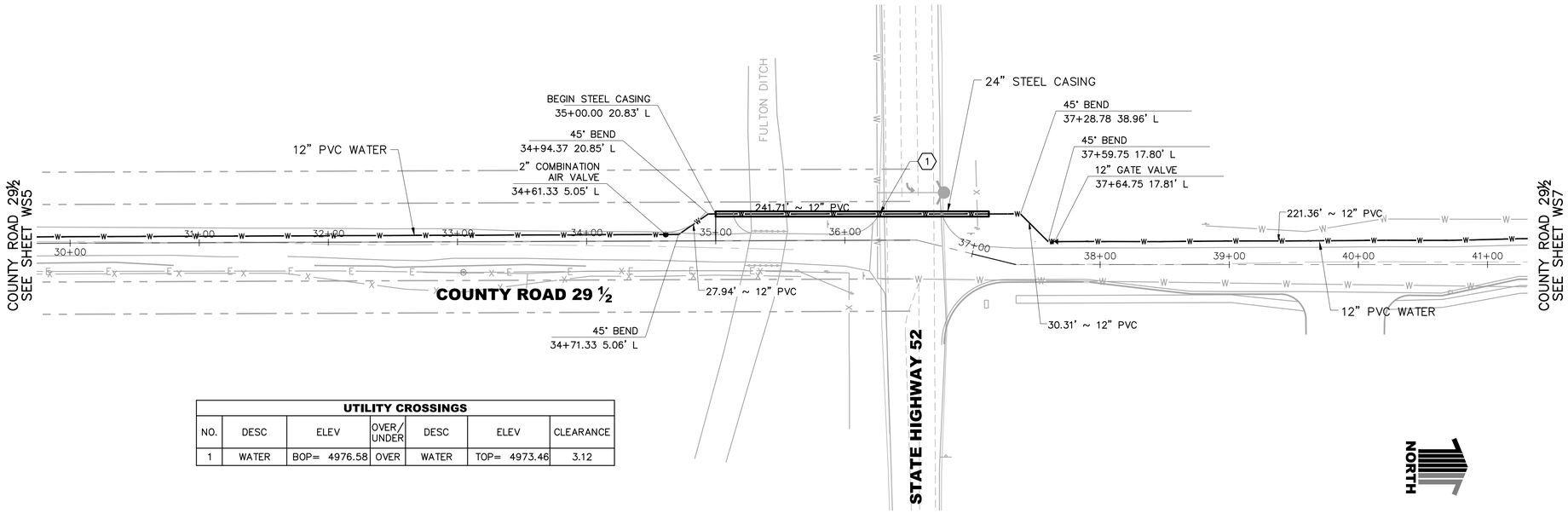

UTILITY CROSSINGS						
NO.	DESC	ELEV	OVER/ UNDER	DESC	ELEV	CLEARANCE
1	WATER	BOP= 4976.58	OVER	WATER	TOP= 4973.46	3.12

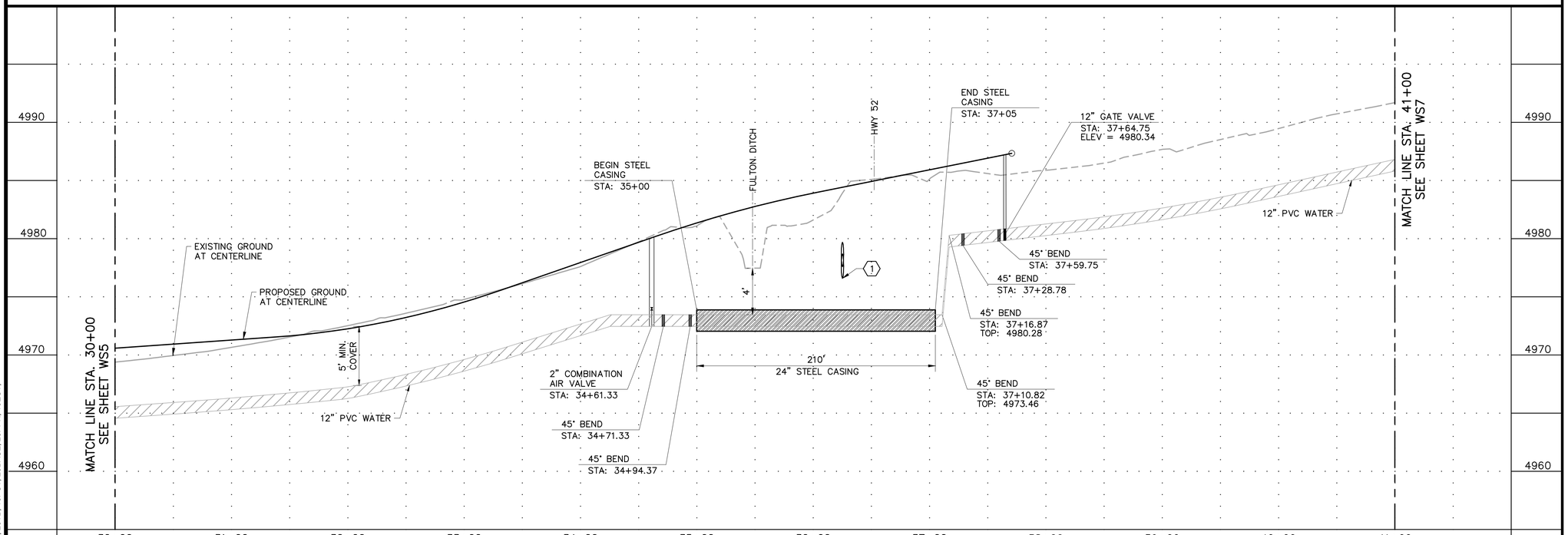

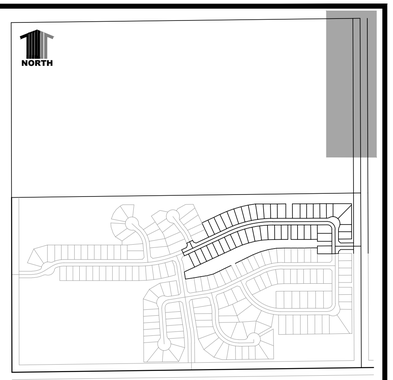

KEYMAP

CONSTRUCTION NOTES:

1. CONSTRUCTION DETAILS AND SPECIFICATIONS SHALL BE PER CITY OF FORT LUPTON, LATEST EDITION UNLESS OTHERWISE NOTED.
2. ALL DIMENSIONS ARE TO FLOWLINE, EXCEPT PROFILES, WHICH ARE CENTERLINE DIMENSIONS, OR UNLESS OTHERWISE NOTED
3. CONTRACTOR SHALL NOTIFY PUBLIC WORKS UTILITIES DIVISION 48 HOURS IN ADVANCE OF COMMENCEMENT OF WORK.

LEGEND

- PROP. WATER MAIN
- PROP. SANITARY SEWER MAIN
- PROP. STORM DRAIN
- PROP. WATER VALVE
- PROP. FIRE HYDRANT
- PROP. STORM DRAIN INLET
- SANITARY SEWER MANHOLE NUMBER (16)
- EX. WATER MAIN
- EX. SANITARY SEWERS
- EX. STORM DRAIN
- EX. UNDERGROUND ELECTRIC
- EX. UNDERGROUND TELEPHONE
- EX. GAS MAIN
- EX. WATER VALVE
- EX. FIRE HYDRANT
- EX. STORM DRAIN INLET
- EX. POWER POLE
- (1) INDICATES UTILITY CROSSING

811 UNCC CALL BEFORE YOU DIG 811 OR 1-800-922-1987 Utility Notification Center of Colorado

DATE	REVISION DESCRIPTION
	6
	5
	4
	3
	2
	1

Drawing Name: 20SW5.dwg
Job Number: EQUINOX MTN SKY
Prepared For: FORT LUPTON
Designer: BEM | Drafter: BEM | Checked: GLP
0 25 50 100
1 inch = 50 ft. Horizontal
1 inch = 5 ft Vertical

Calibre
Calibre Engineering, Inc.
9090 South Ridgeline Boulevard, Suite 105
Highlands Ranch, CO 80129 (303) 730-0434
www.calibre-engineering.com
Construction Management Civil Engineering Surveying

MOUNTAIN SKY
CONSTRUCTION DOCUMENTS - FILING I
WATER AND SANITARY PLAN AND PROFILE

Sheet WS6 18 of 50
Date 30 JUNE 2016

PATH: P:\EQUINOX MTN SKY\CADD\CIVIL\20 - FINAL DEVELOPMENT PLAN PHASE I\20SW5.DWG
PLOTTED BY: Ben Murphy PLOT DATE: 6/30/2016 3:40 PM
XREFS: 10EPN, 20KMWS, 20TB, 10PUT, 20BASE, 20PPN, 10EUT,

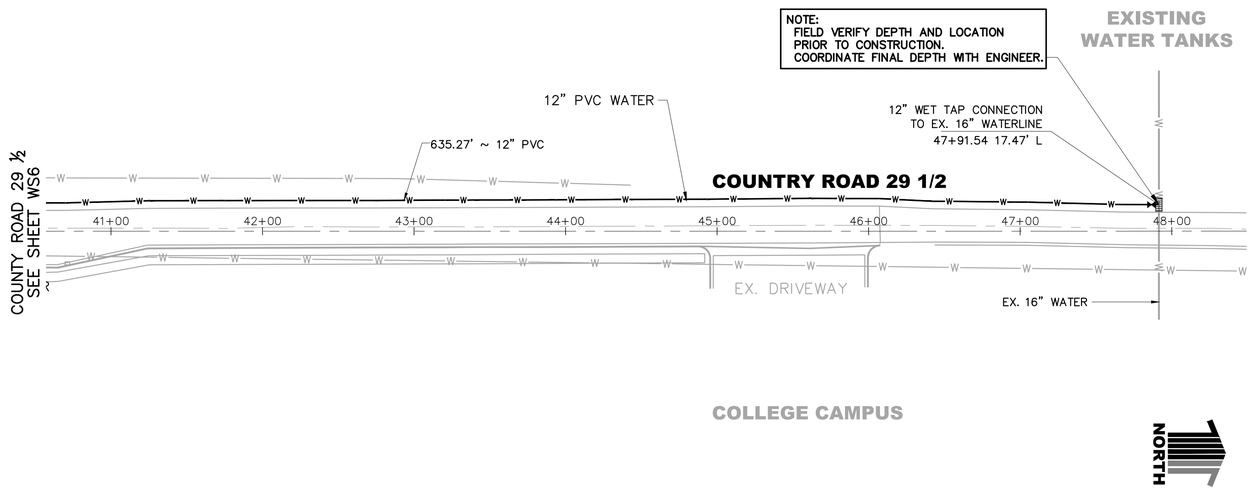

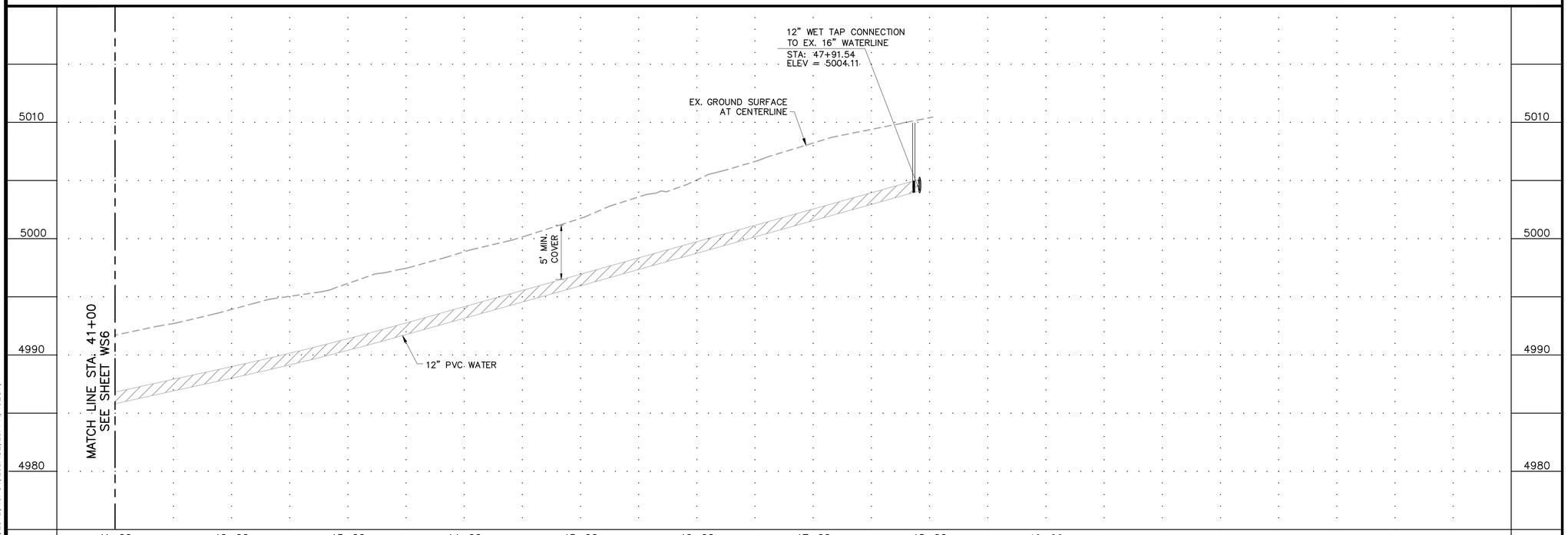

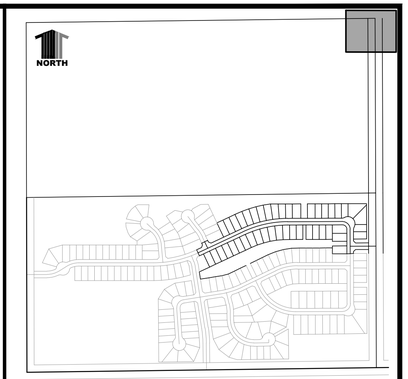

KEYMAP

CONSTRUCTION NOTES:

1. CONSTRUCTION DETAILS AND SPECIFICATIONS SHALL BE PER CITY OF FORT LUPTON, LATEST EDITION UNLESS OTHERWISE NOTED.
2. ALL DIMENSIONS ARE TO FLOWLINE, EXCEPT PROFILES, WHICH ARE CENTERLINE DIMENSIONS, OR UNLESS OTHERWISE NOTED
3. CONTRACTOR SHALL NOTIFY PUBLIC WORKS UTILITIES DIVISION 48 HOURS IN ADVANCE OF COMMENCEMENT OF WORK.

LEGEND

PROP. WATER MAIN
PROP. SANITARY SEWER MAIN
PROP. STORM DRAIN
PROP. WATER VALVE
PROP. FIRE HYDRANT
PROP. STORM DRAIN INLET
SANITARY SEWER MANHOLE NUMBER (16)
EX. WATER MAIN
EX. SANITARY SEWERS
EX. STORM DRAIN
EX. UNDERGROUND ELECTRIC
EX. UNDERGROUND TELEPHONE
EX. GAS MAIN
EX. WATER VALVE
EX. FIRE HYDRANT
EX. STORM DRAIN INLET
EX. POWER POLE
(1) INDICATES UTILITY CROSSING

811
UNCC
CALL BEFORE
YOU DIG
811
OR
1-800-922-1987
Utility Notification
Center of Colorado

DATE	REVISION DESCRIPTION
	6
	5
	4
	3
	2
	1

Drawing Name: 20SW5.dwg
Job Number: EQUINOX MTN SKY
Prepared For: FORT LUPTON
Designer: BEM | Drafter: BEM | Checked: GLP

0 25 50 100
1 inch = 50 ft. Horizontal
1 inch = 5 ft Vertical

Calibre
Calibre Engineering, Inc.
9090 South Ridgeline Boulevard, Suite 105
Highlands Ranch, CO 80129 (303) 730-0434
www.calibre-engineering.com
Construction Management Civil Engineering Surveying

MOUNTAIN SKY
CONSTRUCTION DOCUMENTS - FILING I
WATER AND SANITARY PLAN AND PROFILE

Sheet WS7 19 of 50
Date 30 JUNE 2016

PATH: P:\EQUINOX MTN SKY\CADD\CIVIL\20 - FINAL DEVELOPMENT PLAN PHASE I\20SW5.DWG
PLOTTED BY: Ben Murphy PLOT DATE: 6/30/2016 3:40 PM
XREFS: 10EPN, 20KMWS, 20TB, 10PUT, 20BASE, 20PPN, 10EUT,

UTILITY CROSSINGS						
NO.	DESC	ELEV	OVER/ UNDER	DESC	ELEV	CLEARANCE
11	STORM	BOP= 4936.50	OVER	SANITARY	TOP= 4935.69	0.81'
12	WATER	BOP= 4938.87	OVER	SANITARY	TOP= 4933.97	4.90'

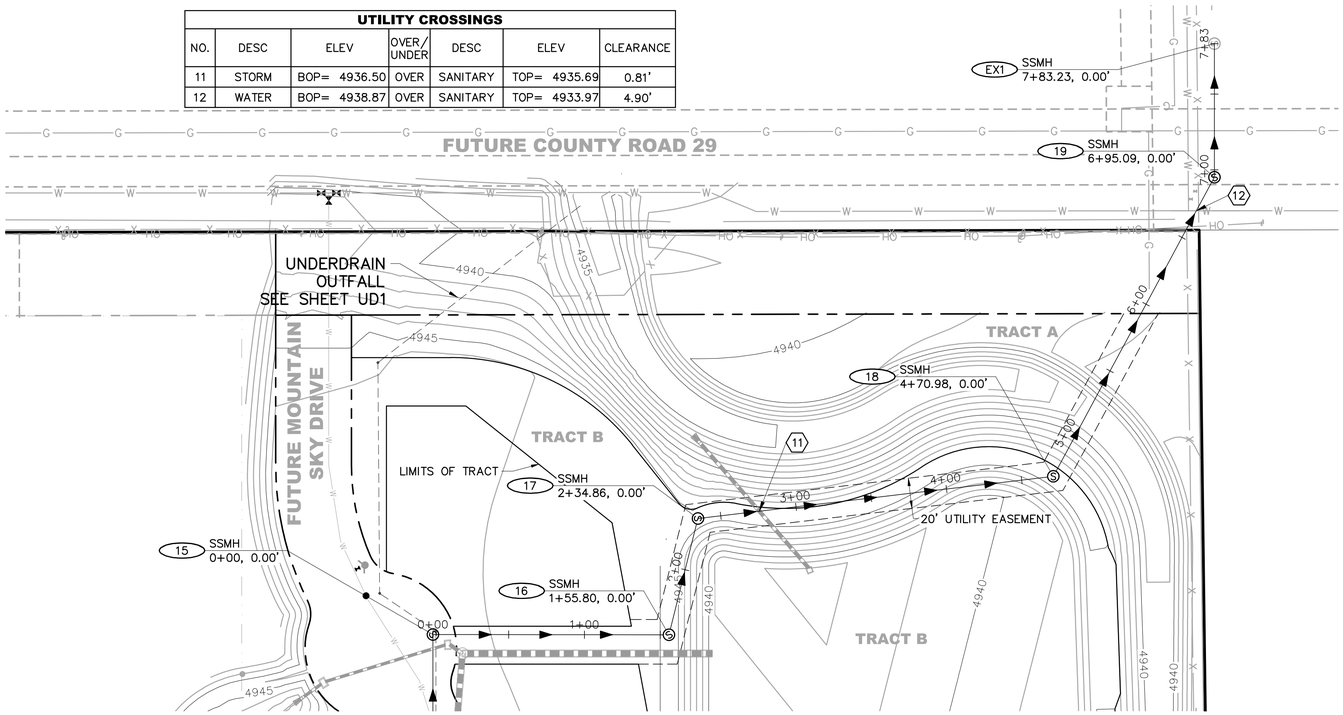

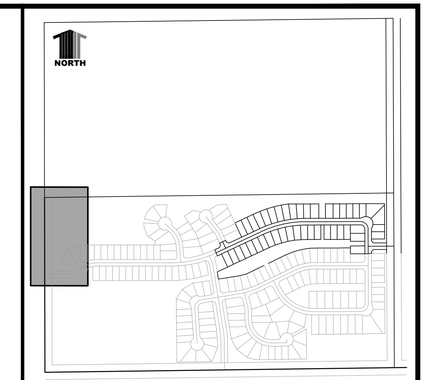

KEYMAP

CONSTRUCTION NOTES:

1. CONSTRUCTION DETAILS AND SPECIFICATIONS SHALL BE PER CITY OF FORT LUPTON, LATEST EDITION UNLESS OTHERWISE NOTED.
2. ALL DIMENSIONS ARE TO FLOWLINE, EXCEPT PROFILES, WHICH ARE CENTERLINE DIMENSIONS, OR UNLESS OTHERWISE NOTED
3. CONTRACTOR SHALL NOTIFY PUBLIC WORKS UTILITIES DIVISION 48 HOURS IN ADVANCE OF COMMENCEMENT OF WORK.

LEGEND

- PROP. WATER MAIN
- PROP. SANITARY SEWER MAIN
- PROP. STORM DRAIN
- PROP. WATER VALVE
- PROP. FIRE HYDRANT
- PROP. STORM DRAIN INLET
- SANITARY SEWER MANHOLE NUMBER (16)
- EX. WATER MAIN
- EX. SANITARY SEWERS
- EX. STORM DRAIN
- EX. UNDERGROUND ELECTRIC
- EX. UNDERGROUND TELEPHONE
- EX. GAS MAIN
- EX. WATER VALVE
- EX. FIRE HYDRANT
- EX. STORM DRAIN INLET
- EX. POWER POLE
- (1) INDICATES UTILITY CROSSING

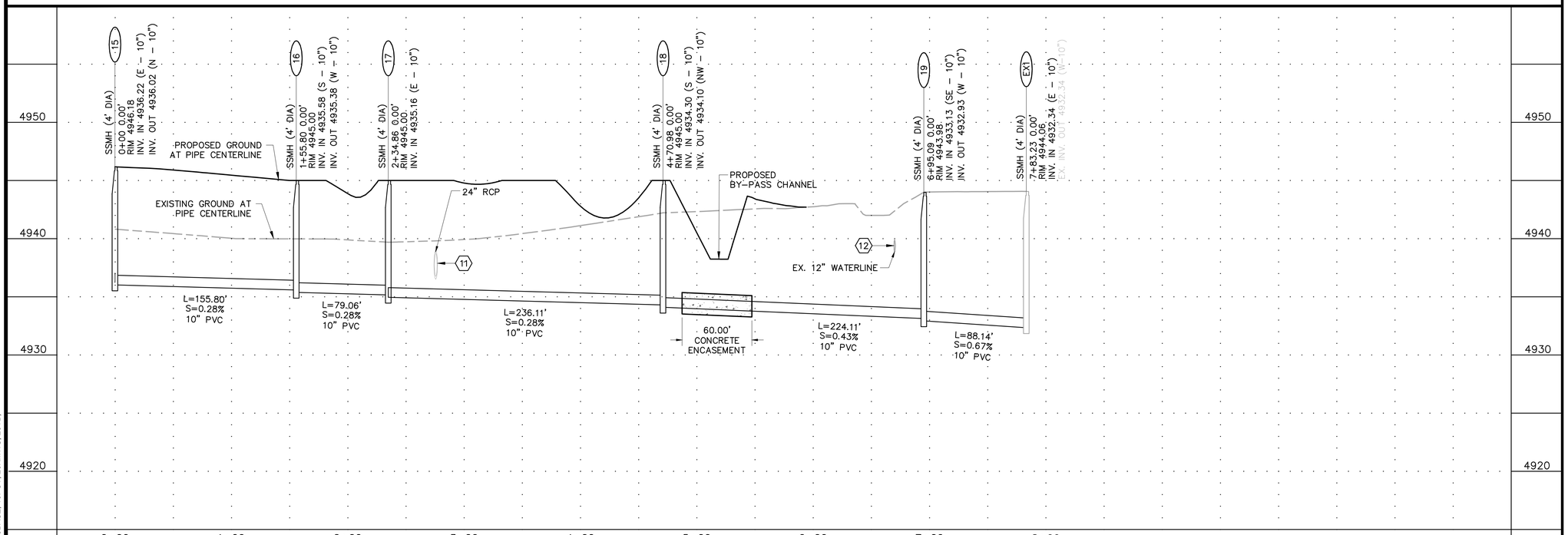

UNCC CALL BEFORE YOU DIG 811 OR 1-800-922-1987 Utility Notification Center of Colorado

DATE	REVISION DESCRIPTION
	6
	5
	4
	3
	2
	1

Drawing Name: 20SS1.dwg
Job Number: EQUINOX MTN SKY
Prepared For: FORT LUPTON
Designer: BEM | Drafter: CMM | Checked: GLP
1 inch = 50 ft. Horizontal
1 inch = 5 ft Vertical

Calibre
Calibre Engineering, Inc.
9090 South Ridgeline Boulevard, Suite 105
Highlands Ranch, CO 80129 (303) 730-0434
www.calibre-engineering.com
Construction Management Civil Engineering Surveying

MOUNTAIN SKY
CONSTRUCTION DOCUMENTS - FILING I
SANITARY SEWER OUTFALL

Sheet SS1 20 of 50
Date 30 JUNE 2016

PATH: P:\EQUINOX MTN SKY\CADD\CIVIL\20 - FINAL DEVELOPMENT PLAN PHASE I\20SS1.DWG
PLOTTED BY: Ben Murphy PLOT DATE: 6/30/2016 3:41 PM
XREFS: 10EUT, 10EPN, 20BASE, 10PUT, 20KMWS, 20TB,

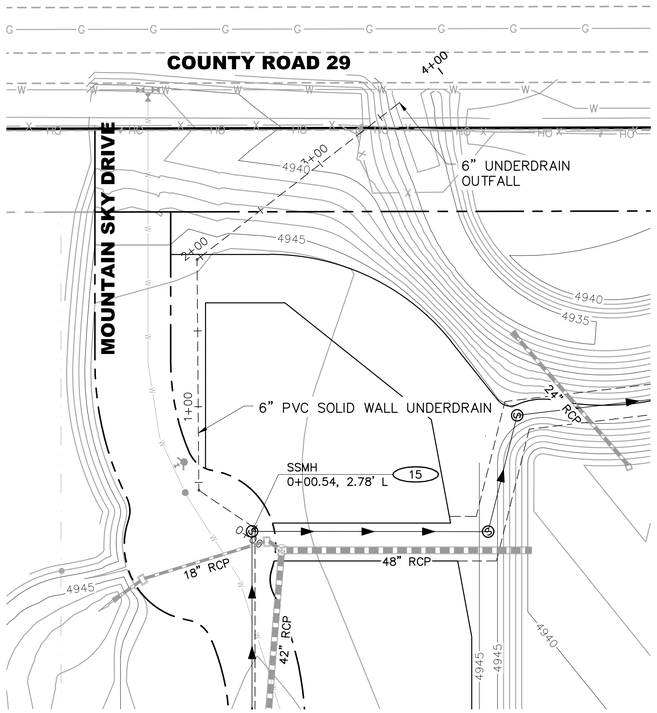

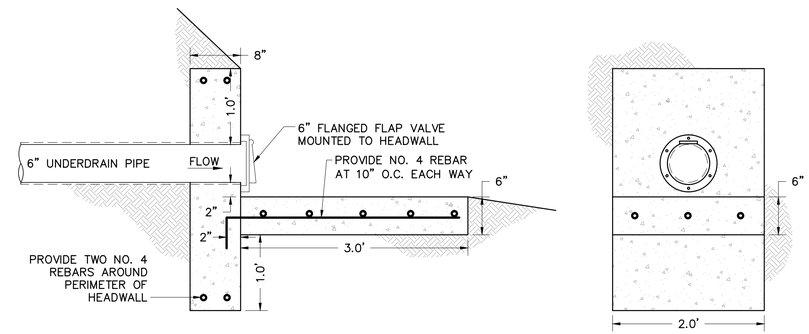

PIPE DAYLIGHT DETAIL

N.T.S.

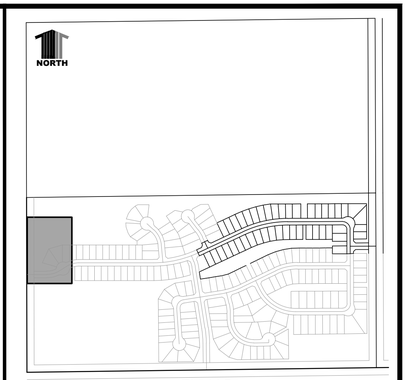

KEYMAP

CONSTRUCTION NOTES:

1. CONSTRUCTION DETAILS AND SPECIFICATIONS SHALL BE PER CITY OF FORT LUPTON, LATEST EDITION UNLESS OTHERWISE NOTED.
2. ALL DIMENSIONS ARE TO FLOWLINE, EXCEPT PROFILES, WHICH ARE CENTERLINE DIMENSIONS, OR UNLESS OTHERWISE NOTED
3. CONTRACTOR SHALL NOTIFY PUBLIC WORKS UTILITIES DIVISION 48 HOURS IN ADVANCE OF COMMENCEMENT OF WORK.

LEGEND

PROP. WATER MAIN
PROP. SANITARY SEWER MAIN
PROP. STORM DRAIN
PROP. WATER VALVE
PROP. FIRE HYDRANT
PROP. STORM DRAIN INLET
SANITARY SEWER MANHOLE NUMBER (16)
EX. WATER MAIN
EX. SANITARY SEWERS
EX. STORM DRAIN
EX. UNDERGROUND ELECTRIC
EX. UNDERGROUND TELEPHONE
EX. GAS MAIN
EX. WATER VALVE
EX. FIRE HYDRANT
EX. STORM DRAIN INLET
EX. POWER POLE
(1) INDICATES UTILITY CROSSING

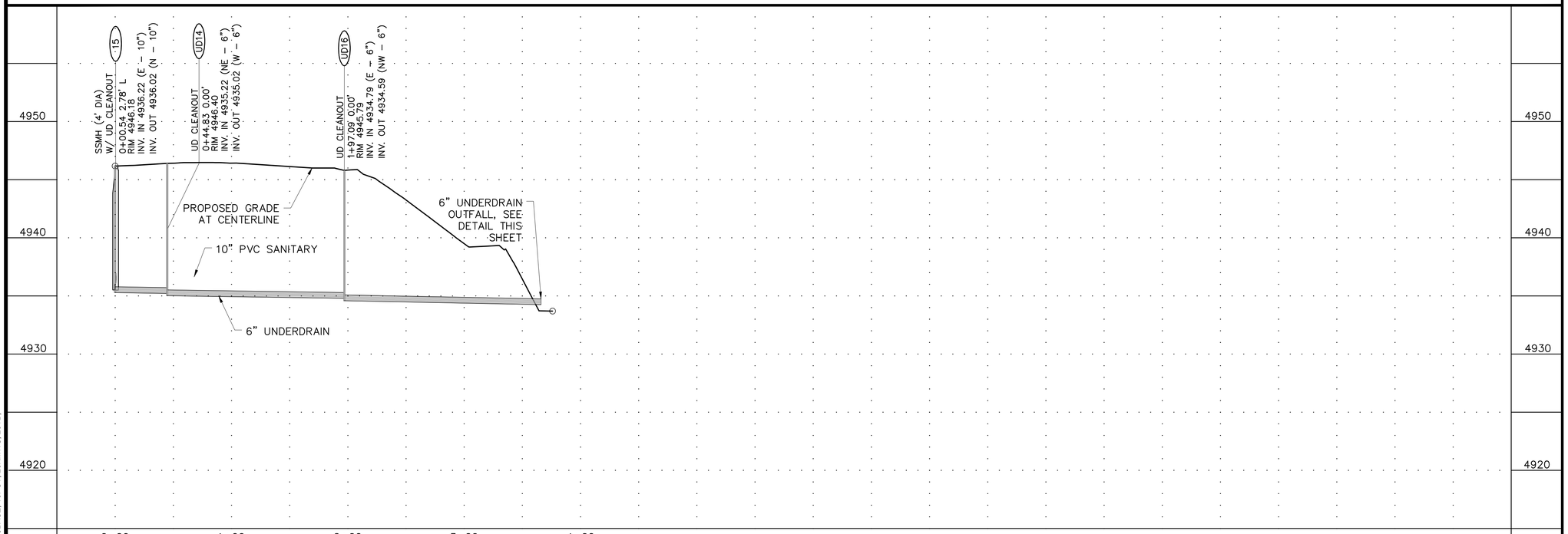

811 UNCC CALL BEFORE YOU DIG 811 OR 1-800-922-1987 Utility Notification Center of Colorado

DATE	REVISION DESCRIPTION
	6
	5
	4
	3
	2
	1

Drawing Name: 20UD1.dwg
Job Number: EQUINOX MTN SKY
Prepared For: FORT LUPTON
Designer: BEM | Drafter: CMM | Checked: GLP
0 25 50 100
1 inch = 50 ft. Horizontal
1 inch = 5 ft Vertical

Calibre
Calibre Engineering, Inc.
9090 South Ridgeline Boulevard, Suite 105
Highlands Ranch, CO 80129 (303) 730-0434
www.calibre-engineering.com
Construction Management Civil Engineering Surveying

MOUNTAIN SKY
CONSTRUCTION DOCUMENTS - FILING I
UNDERDRAIN OUTFALL

Sheet UD1 21 of 50
Date 30 JUNE 2016

PATH: P:\EQUINOX MTN SKY\CADD\CIVIL\20 - FINAL DEVELOPMENT PLAN PHASE I\20UD1.DWG
PLOTTED BY: Ben Murphy PLOT DATE: 6/30/2016 3:42 PM
XREFS: 10EUT, 10EPN, 20BASE, 10PUT, 20KMWS, 20TB,

EMERGENCY OVERFLOW WEIR
EL.=4944.0
(SEE DETAIL SHEET DT2)

SEE SHEETS CH1-2 FOR
CHANNEL GRADING

6' CRUSHER FINES RECREATION TRAIL

VACANT LAND

TRACT A

TRACT B

TRACT C

TRACT N

FOR DETAILED POND
GRADING INFORMATION
SEE SHEET CH1

CONCRETE TRICKLE CHANNEL

LIMITS OF TRACT

12' CONCRETE
MAINTENANCE PATH

FUTURE MOUNTAIN SKY PLACE

FUTURE MOUNTAIN SKY COURT

FUTURE MOUNTAIN SKY DRIVE

FUTURE COUNTY ROAD 29

DRAINAGE
EASEMENT

OIL AND GAS OPERATIONS AREA
TO REMAIN IN NATURAL CONDITION
WITH TRANSITION GRADING AROUND
THE PERIMETER

COUNTY ROAD 12

SWALE CONTINUES TO
COUNTY ROAD 12
SEE LEFT

FUTURE MONTE
VISTA STREET

FUTURE MONTE
VISTA LANE

FUTURE MOUNTAIN
SKY AVENUE

MOUNTAIN SKY DRIVE
SEE SHEET GR2

NORTH

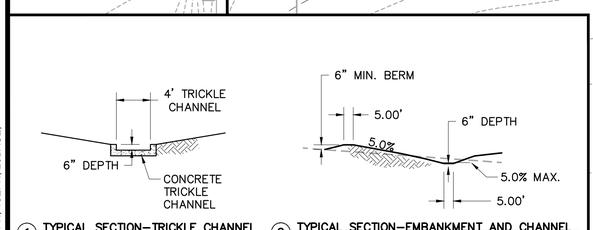

1 TYPICAL SECTION-TRICKLE CHANNEL
N.T.S.

2 TYPICAL SECTION-EMBANKMENT AND CHANNEL
N.T.S.

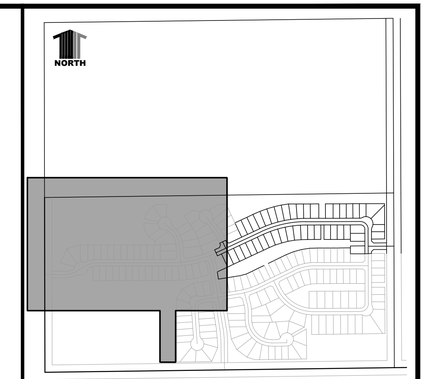

KEYMAP

CONSTRUCTION NOTES: GRADING

1. ALL DIMENSIONS ARE TO FLOWLINE, EXCEPT PROFILES, WHICH ARE CENTERLINE DIMENSIONS, OR UNLESS OTHERWISE NOTED.

2. ALL SWALES WITHIN LOTS SHALL HAVE A MINIMUM 2% SLOPE.

LEGEND

- PROJECT BOUNDARY
- EASEMENT
- R.O.W.
- 5235 PROPOSED CONTOURS
- 5235 EXISTING CONTOURS
- PROPOSED SWALE

12 LOT NUMBER
A LOT TYPE

A – "A" TYPE LOT
T – TRANSITIONAL LOT
B – "B" TYPE LOT
W – WALK OUT LOT
G – GARDEN LEVEL LOT

811 UNCC CALL BEFORE YOU DIG
811
OR
1-800-922-1987
Utility Notification Center of Colorado

DATE	REVISION DESCRIPTION
	6
	5
	4
	3
	2
	1

Drawing Name: 20GR1.dwg
Job Number: EQUINOX MTN SKY
Prepared For: FORT LUPTON
Designer: BEM | Drafter: BEM | Checked: GLP
0 30 60 120
1 inch = 60 ft. Horizontal

Calibre
Calibre Engineering, Inc.
9090 South Ridgeline Boulevard, Suite 105
Highlands Ranch, CO 80129 (303) 730-0434
www.calibre-engineering.com
Construction Management Civil Engineering Surveying

MOUNTAIN SKY
CONSTRUCTION DOCUMENTS - FILING I
GRADING PLAN

Sheet GR1 22 of 50
Date 30 JUNE 2016

PATH: P:\EQUINOX MTN SKY\CADD\CIVIL\20 - FINAL DEVELOPMENT PLAN PHASE I\20GR1.DWG
PLOTTED BY: BEN MURPHY PLOT DATE: 6/30/2016 3:43 PM
XREFS: 20TB, 20KMGR, 20PPN, 10EPN, 20BASE,

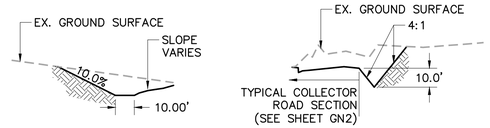

4 TYPICAL SECTION–SWALE
N.T.S.

5 TYPICAL SECTION–ROADSIDE DITCH
N.T.S.

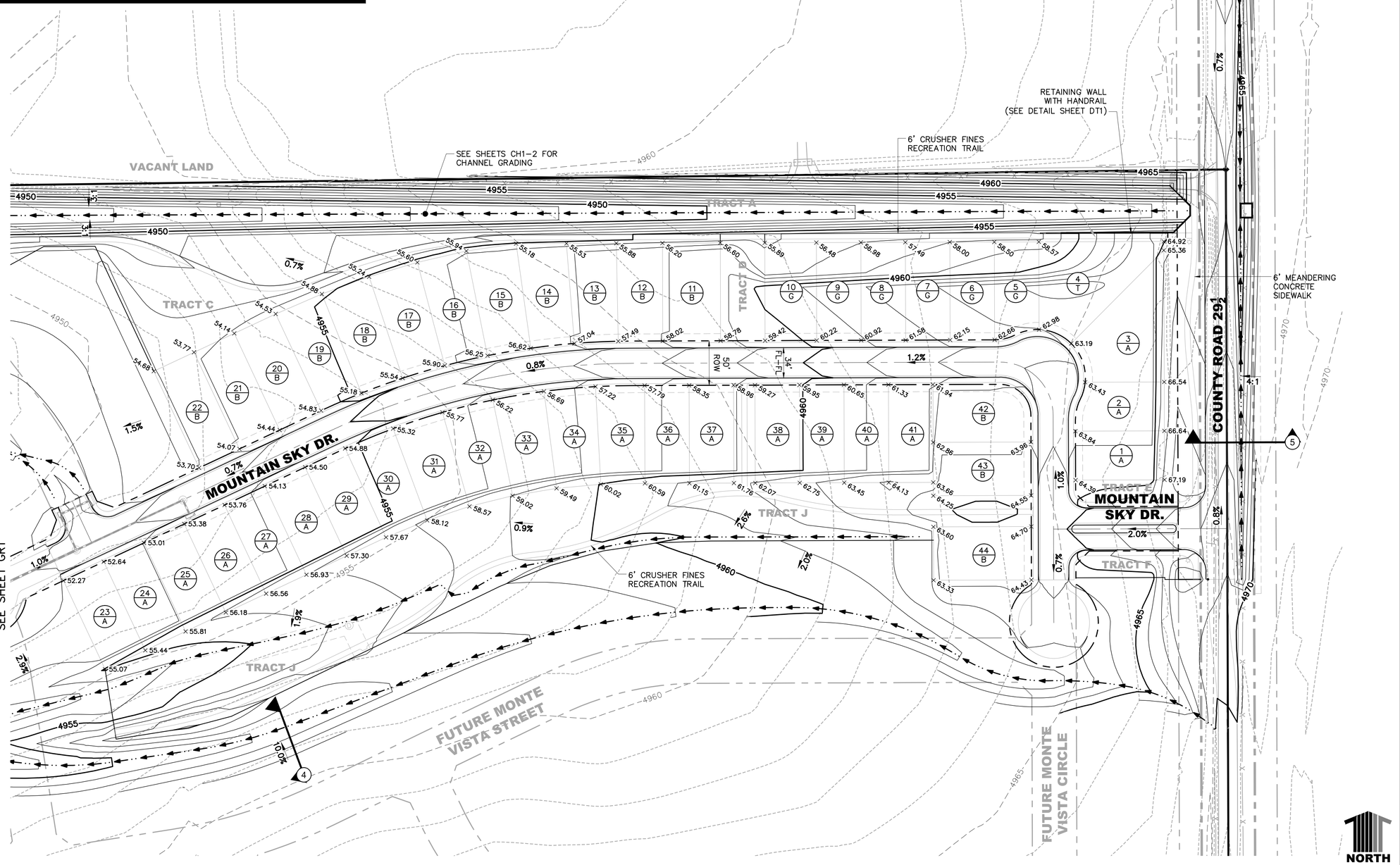

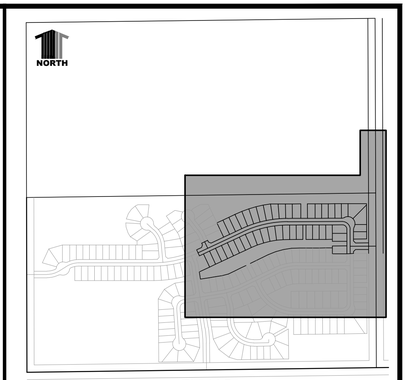

KEYMAP

CONSTRUCTION NOTES: GRADING

1. ALL DIMENSIONS ARE TO FLOWLINE, EXCEPT PROFILES, WHICH ARE CENTERLINE DIMENSIONS, OR UNLESS OTHERWISE NOTED.

2. ALL SWALES WITHIN LOTS SHALL HAVE A MINIMUM 2% SLOPE.

LEGEND

- PROJECT BOUNDARY
- EASEMENT
- R.O.W.
- 5235 PROPOSED CONTOURS
- 5235 EXISTING CONTOURS
- PROPOSED SWALE

12 LOT NUMBER
A LOT TYPE

A – "A" TYPE LOT
T – TRANSITIONAL LOT
B – "B" TYPE LOT
W – WALK OUT LOT
G – GARDEN LEVEL LOT

811 UNCC CALL BEFORE YOU DIG 811 OR 1-800-922-1987
Utility Notification Center of Colorado

DATE	REVISION DESCRIPTION
	6
	5
	4
	3
	2
	1

Drawing Name: 20GR1.dwg
Job Number: EQUINOX MTN SKY
Prepared For: FORT LUPTON
Designer: BEM | Drafter: BEM | Checked: GLP
0 30 60 120 — 1 inch = 60 ft. Horizontal

Calibre
Calibre Engineering, Inc.
9090 South Ridgeline Boulevard, Suite 105
Highlands Ranch, CO 80129 (303) 730-0434
www.calibre-engineering.com
Construction Management Civil Engineering Surveying

MOUNTAIN SKY
CONSTRUCTION DOCUMENTS - FILING I
GRADING PLAN

Sheet GR2 of 23 / 50
Date 30 JUNE 2016

PATH: P:\EQUINOX MTN SKY\CADD\CIVIL\20 - FINAL DEVELOPMENT PLAN PHASE I\20GR1.DWG
PLOTTED BY: BEN MURPHY PLOT DATE: 6/30/2016 3:43 PM
XREFS: 20TB, 20KMGR, 20PPN, 10EPN, 20BASE,

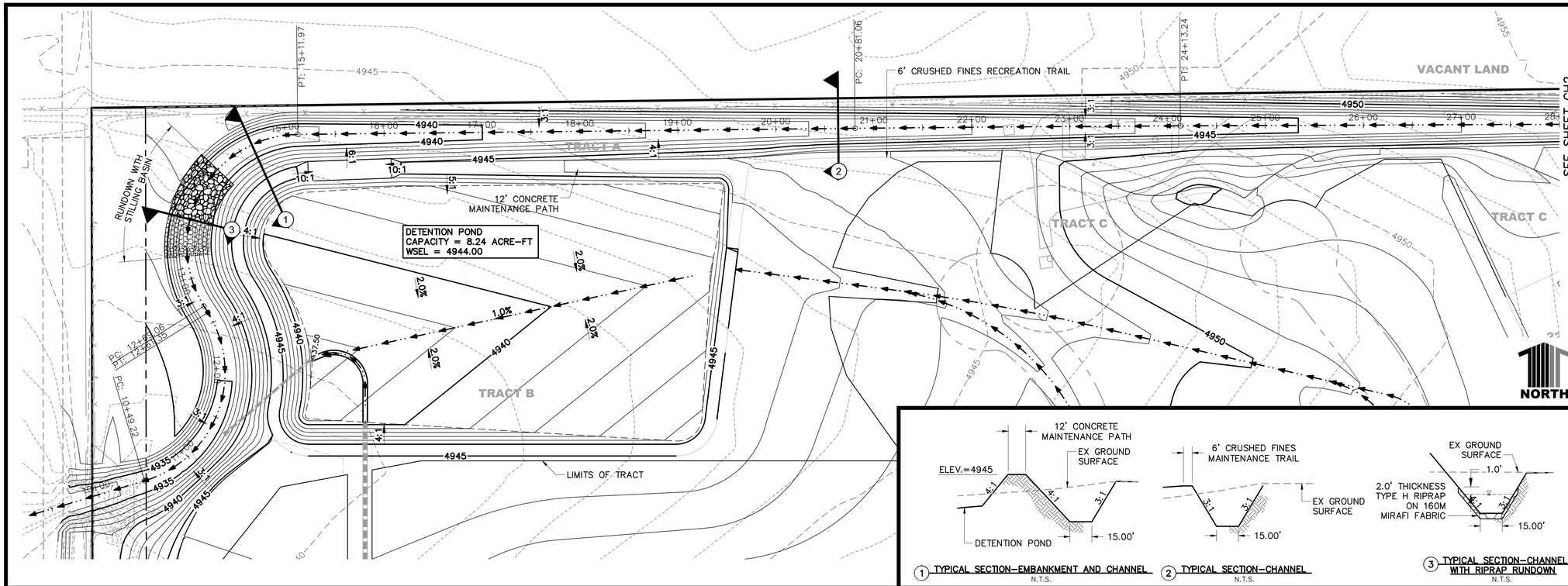

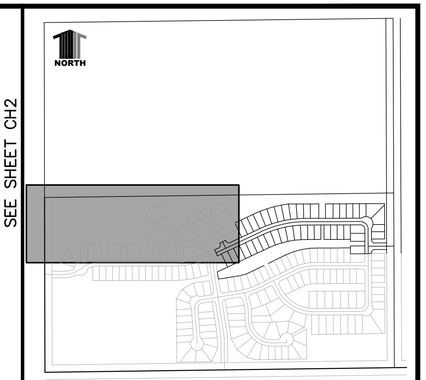

KEYMAP

CONSTRUCTION NOTES: GRADING

1. ALL DIMENSIONS ARE TO FLOWLINE, EXCEPT PROFILES, WHICH ARE CENTERLINE DIMENSIONS, OR UNLESS OTHERWISE NOTED.

2. ALL SWALES WITHIN LOTS SHALL HAVE A MINIMUM 2% SLOPE.

1 TYPICAL SECTION–EMBANKMENT AND CHANNEL N.T.S.

2 TYPICAL SECTION–CHANNEL N.T.S.

3 TYPICAL SECTION–CHANNEL WITH RIPRAP RUNDOWN N.T.S.

LEGEND

- PROJECT BOUNDARY
- EASEMENT
- R.O.W.
- 5235 PROPOSED CONTOURS
- 5235 EXISTING CONTOURS
- PROPOSED SWALE
- PROPOSED RIPRAP

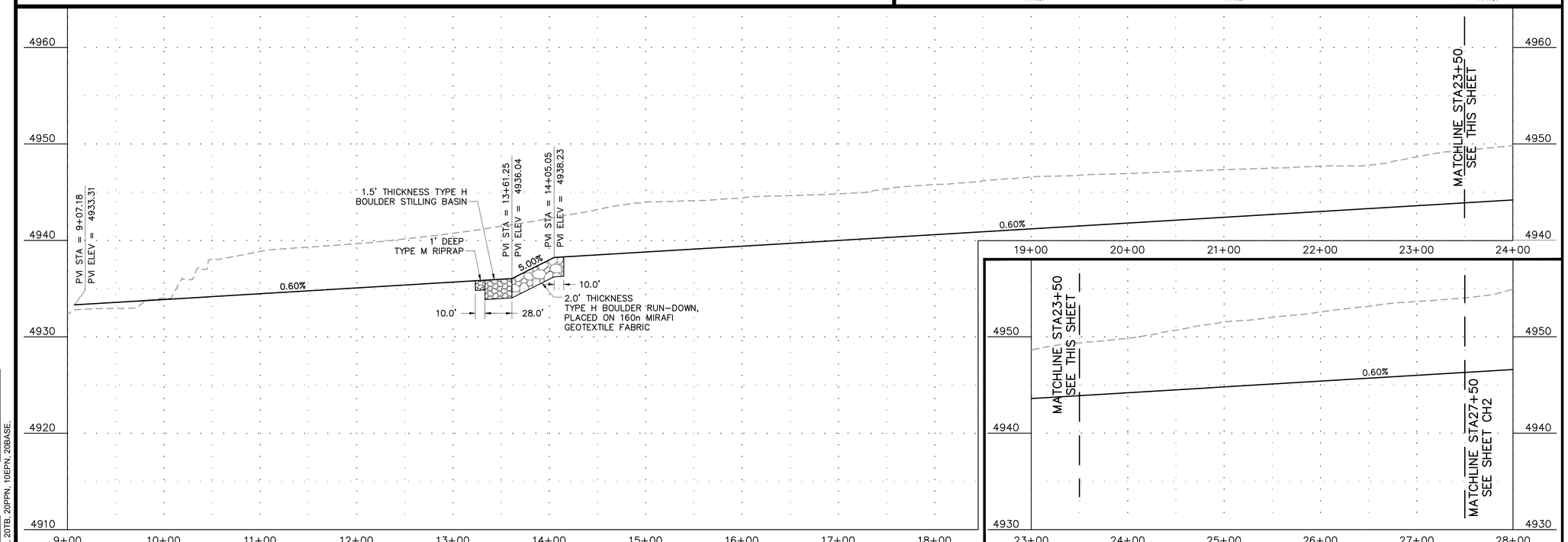

811 UNCC CALL BEFORE YOU DIG 811 OR 1-800-922-1987 Utility Notification Center of Colorado

DATE	REVISION DESCRIPTION
6	
5	
4	
3	
2	
1	

Drawing Name: 20CH1.dwg
Job Number: EQUINOX MTN SKY
Prepared For: FORT LUPTON
Designer: BEM | Drafter: BEM | Checked: GLP

0 30 60 120
1 inch = 60 ft. Horizontal
1 inch = 6 ft. Vertical

Calibre
Calibre Engineering, Inc.
9090 South Ridgeline Boulevard, Suite 105
Highlands Ranch, CO 80129 (303) 730-0434
www.calibre-engineering.com
Construction Management Civil Engineering Surveying

MOUNTAIN SKY
CONSTRUCTION DOCUMENTS - FILING I
CHANNEL GRADING

Sheet CH1 of 24 / 50

Date 30 JUNE 2016

PATH: P:\EQUINOX MTN SKY\CADD\CIVIL\20 - FINAL DEVELOPMENT PLAN PHASE I\20CH1.DWG
PLOTTED BY: BEN MURPHY PLOT DATE: 6/30/2016 3:44 PM
XREFS: 10PUT, 20KMCH, 20TB, 20PPN, 10EPN, 20BASE.

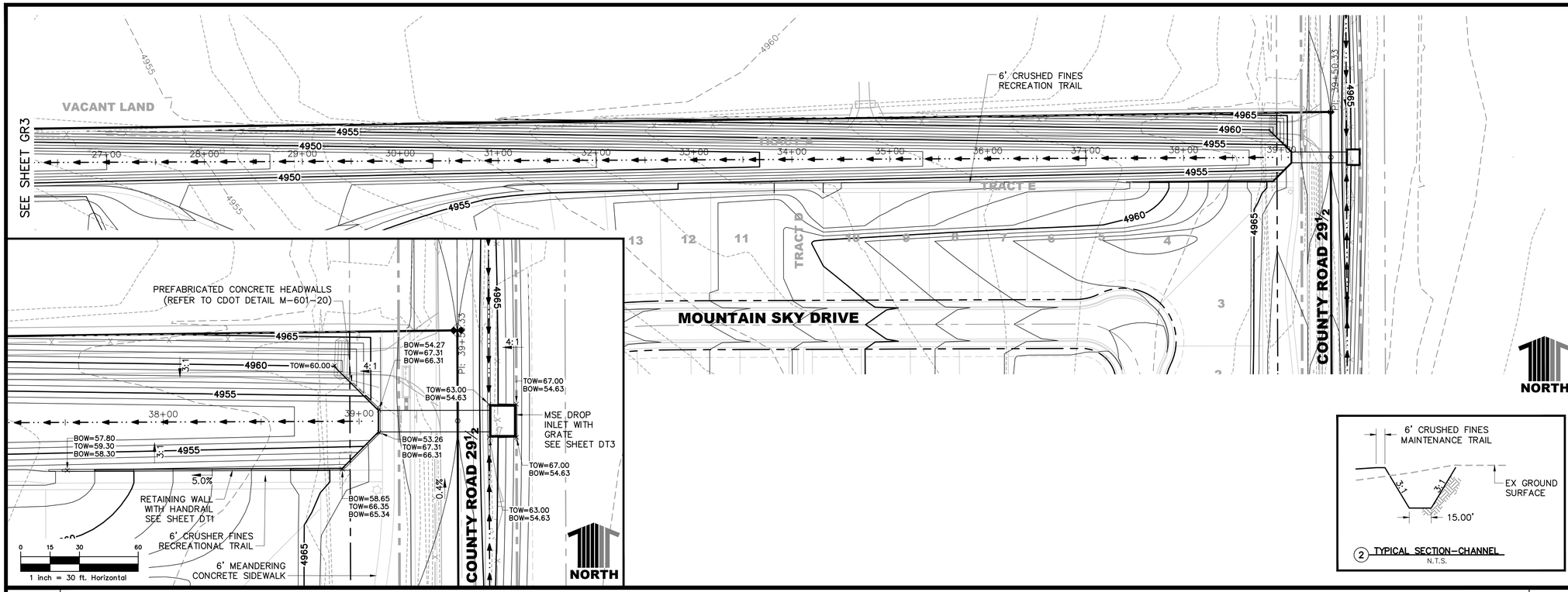

2 TYPICAL SECTION-CHANNEL
N.T.S.

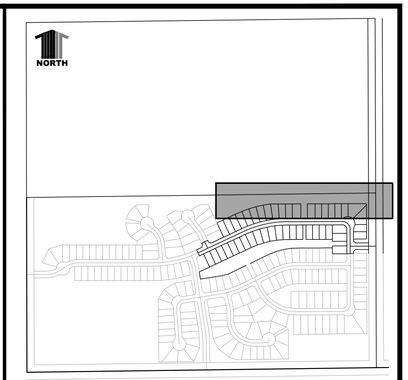

KEYMAP

CONSTRUCTION NOTES: GRADING

1. ALL DIMENSIONS ARE TO FLOWLINE, EXCEPT PROFILES, WHICH ARE CENTERLINE DIMENSIONS, OR UNLESS OTHERWISE NOTED.

2. ALL SWALES WITHIN LOTS SHALL HAVE A MINIMUM 2% SLOPE.

LEGEND

- PROJECT BOUNDARY
- EASEMENT
- R.O.W.
- 5235 PROPOSED CONTOURS
- 5235 EXISTING CONTOURS
- PROPOSED SWALE
- PROPOSED RIPRAP

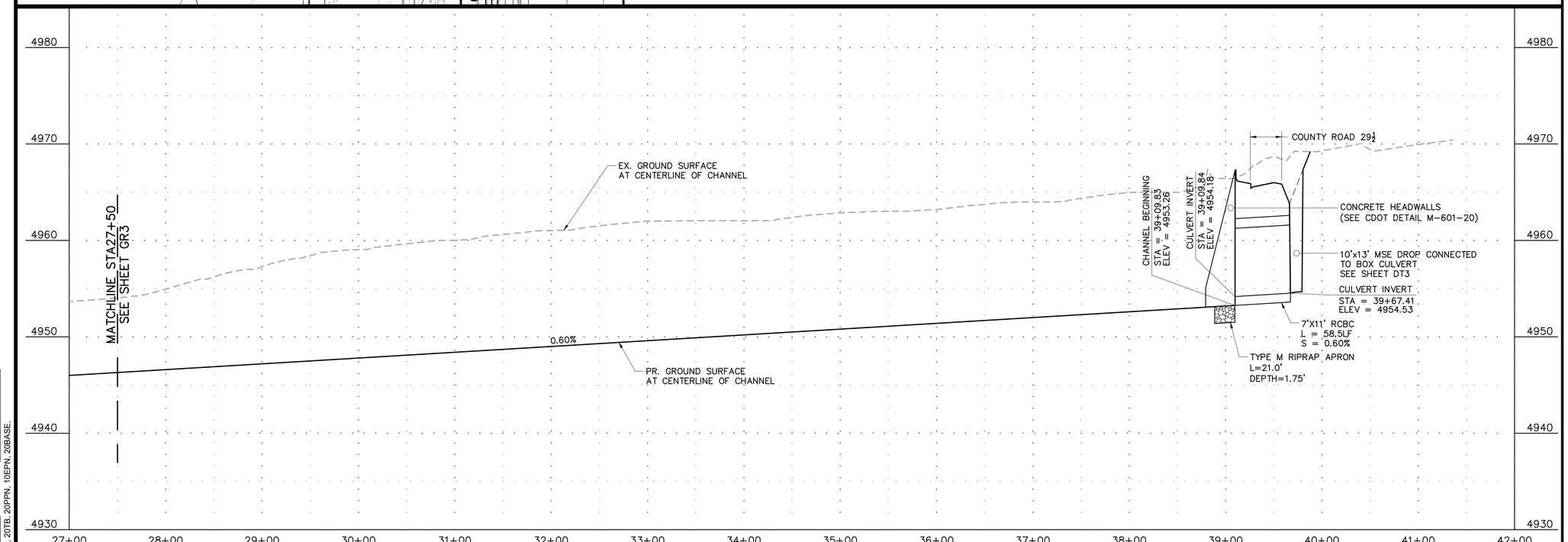

UNCC CALL BEFORE YOU DIG
811
OR
1-800-922-1987
Utility Notification Center of Colorado

DATE		REVISION DESCRIPTION
	6	
	5	
	4	
	3	
	2	
	1	

Drawing Name: 20CH1.dwg
Job Number: EQUINOX MTN SKY
Prepared For: FORT LUPTON
1 inch = 60 ft. Horizontal
1 inch = 6 ft. Vertical
Designer: BEM | Drafter: BEM | Checked: GLP

Calibre
Calibre Engineering, Inc.
9090 South Ridgeline Boulevard, Suite 105
Highlands Ranch, CO 80129 (303) 730-0434
www.calibre-engineering.com
Construction Management Civil Engineering Surveying

MOUNTAIN SKY
CONSTRUCTION DOCUMENTS - FILING I
CHANNEL GRADING

Sheet CH2 of 25 / 50
Date 30 JUNE 2016

PATH: P:\EQUINOX MTN SKY\CADD\CIVIL\20 - FINAL DEVELOPMENT PLAN PHASE I\20CH1.DWG
PLOTTED BY: BEN MURPHY PLOT DATE: 6/30/2016 3:44 PM
XREFS: 10PUT, 20KMCH, 20TB, 20PPN, 10EPN, 20BASE.

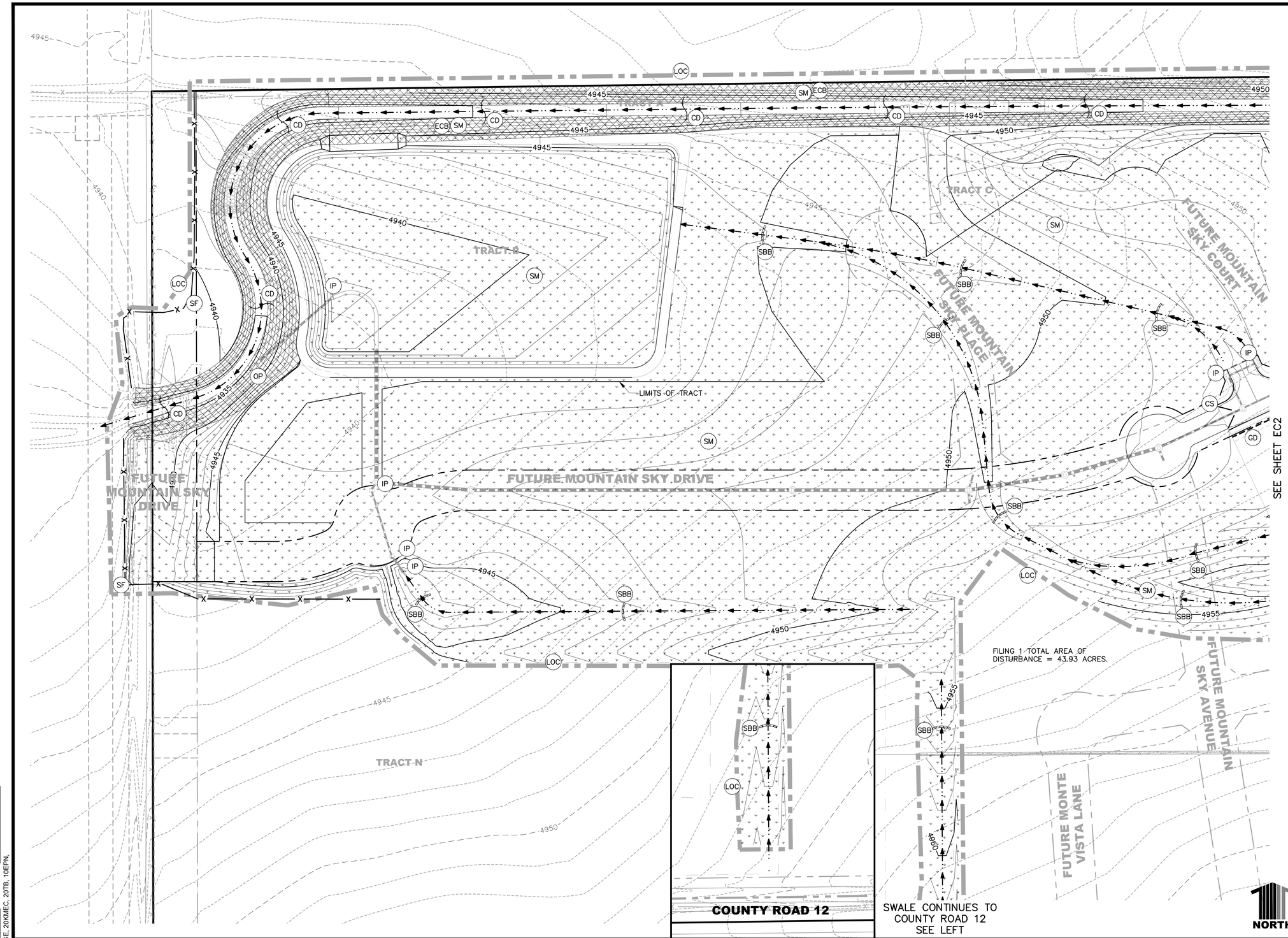

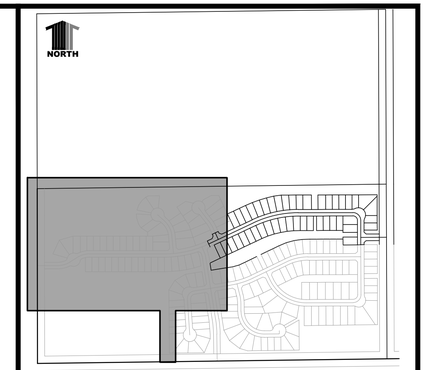

KEYMAP

CONSTRUCTION NOTES: EROSION CONTROL

1. SEE DETAIL SHEETS FOR EROSION CONTROL DETAILS.
2. A VTC SHALL BE CONSTRUCTED AT ALL AREAS WHERE CONSTRUCTION TRAFFIC IS MOVING FROM PERVIOUS TO IMPERVIOUS AREAS.
3. SLOPES GREATER THAN OR EQUAL TO 4:1 SHALL BE SURFACE ROUGHENED FOR INTERIM STABILIZATION UNTIL SUFFICIENT GROWTH IS IN PLACE TO DETER EROSION.
4. THE DETENTION POND WILL ACT AS A SEDIMENT BASIN UNTIL THE SITE HAS REACHED FINAL STABILIZATION.
5. THE CONTRACTOR SHALL PROTECT NATURAL VEGETATION TO THE MAXIMUM EXTENT PRACTICABLE.
6. ALL DISTURBED AREAS WILL BE SEEDED AND MULCHED. SLOPES 4:1 AND STEEPER WILL BE SEEDED AND CRIMPED MULCHED.

LEGEND:

- ECB — EROSION CONTROL BLANKET
- VTC — TRACKING CONTROL PAD
- CS — CURB SOCK INLET PROTECTION
- CD — CHECK DAM
- IP — INLET PROTECTION (ALL INLETS IN SUMP CONDITION)
- OP — OUTLET PROTECTION
- GD — GRADE DIFFERENTIAL AT BACK OF WALK/CURB
- SM — SEEDING AND MULCHING
- SSA — STABILIZED STAGING AREA
- CWA — CONCRETE WASHOUT AREA
- SSB — STRAW BALE BARRIER
- LOC — LIMITS OF CONSTRUCTION
- SF — SILT FENCE
- PROTECT EXISTING VEGITATION
- PROPOSED CONTOURS — 4925
- EXISTING CONTOURS — 4925
- PROPOSED STORM DRAIN MANHOLE — D
- PROPOSED STORM DRAIN PIPE
- PROPOSED STORM DRAIN INLET
- FLOW ARROW
- SWALE

811 UNCC CALL BEFORE YOU DIG 811 OR 1-800-922-1987 Utility Notification Center of Colorado

DATE	REVISION DESCRIPTION
6	
5	
4	
3	
2	
1	

Drawing Name: 20EC1.dwg
Job Number: EQUINOX MTN SKY
Prepared For: FORT LUPTON
Designer: BEM | Drafter: BEM | Checked: GLP
0 25 50 100 — 1 inch = 50 ft. Horizontal

Calibre
Calibre Engineering, Inc.
9090 South Ridgeline Boulevard, Suite 105
Highlands Ranch, CO 80129 (303) 730-0434
www.calibre-engineering.com
Construction Management Civil Engineering Surveying

MOUNTAIN SKY
CONSTRUCTION DOCUMENTS - FILING I
EROSION CONTROL PLAN

Sheet EC1 — 26 of 50
Date 30 JUNE 2016

PATH: P:\EQUINOX MTN SKY\CADD\CIVIL\20 - FINAL DEVELOPMENT PLAN PHASE I\20EC1.DWG
PLOTTED BY: Ben Murphy PLOT DATE: 8/30/2016 3:45 PM
XREFS: 20PPN, 20BASE, 20KMEC, 20TB, 10EPN,

SEE PLAN VIEW BELOW

SEE SHEET GR1

MOUNTAIN SKY DRIVE

MOUNTAIN SKY DRIVE

COUNTY ROAD 29½

TRACT A

TRACT C

TRACT D

TRACT E

TRACT F

TRACT J

FUTURE MOUNTAIN SKY COURT

FUTURE MONTE VISTA STREET

FUTURE MONTE VISTA CIRCLE

LIMITS OF TRACT

FILING 1 TOTAL AREA OF DISTURBANCE = 43.93 ACRES.

4950 4955 4960 4965 4970

LOC SBB SM ECB CD GD CS IP VTC SF CWA SSA

NORTH

SEE PLAN VIEW BELOW

NORTH

SEE PLAN VIEW BELOW

COUNTY ROAD 29½

4970 4965

SEE PLAN VIEW ABOVE

COUNTY ROAD 29½

STATE HIGHWAY 52

FULTON DITCH

LIMITS OF CONTRUCTION CONTINUES NORTH TO WATER TIE-IN

NORTH

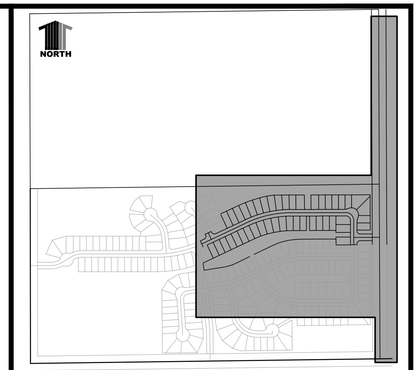

KEYMAP

CONSTRUCTION NOTES: EROSION CONTROL

1. SEE DETAIL SHEETS FOR EROSION CONTROL DETAILS.
2. A VTC SHALL BE CONSTRUCTED AT ALL AREAS WHERE CONSTRUCTION TRAFFIC IS MOVING FROM PERVIOUS TO IMPERVIOUS AREAS.
3. SLOPES GREATER THAN OR EQUAL TO 4:1 SHALL BE SURFACE ROUGHENED FOR INTERIM STABILIZATION UNTIL SUFFICIENT GROWTH IS IN PLACE TO DETER EROSION.
4. THE DETENTION POND WILL ACT AS A SEDIMENT BASIN UNTIL THE SITE HAS REACHED FINAL STABILIZATION.
5. THE CONTRACTOR SHALL PROTECT NATURAL VEGETATION TO THE MAXIMUM EXTENT PRACTICABLE.
6. ALL DISTURBED AREAS WILL BE SEEDED AND MULCHED. SLOPES 4:1 AND STEEPER WILL BE SEEDED AND CRIMPED MULCHED.

LEGEND:

ECB	EROSION CONTROL BLANKET
VTC	TRACKING CONTROL PAD
CS	CURB SOCK INLET PROTECTION
CD	CHECK DAM
IP	INLET PROTECTION (ALL INLETS IN SUMP CONDITION)
OP	OUTLET PROTECTION
GD	GRADE DIFFERENTIAL AT BACK OF WALK/CURB
SM	SEEDING AND MULCHING
SSA	STABILIZED STAGING AREA
CWA	CONCRETE WASHOUT AREA
SSB	STRAW BALE BARRIER
LOC	LIMITS OF CONSTRUCTION
SF	SILT FENCE
	PROTECT EXISTING VEGITATION
	PROPOSED CONTOURS 4925
	EXISTING CONTOURS 4925
	PROPOSED STORM DRAIN MANHOLE
	PROPOSED STORM DRAIN PIPE
	PROPOSED STORM DRAIN INLET
	FLOW ARROW
	SWALE

811 UNCC CALL BEFORE YOU DIG 811 OR 1-800-922-1987 Utility Notification Center of Colorado

DATE	REVISION DESCRIPTION
6	
5	
4	
3	
2	
1	

Drawing Name: 20EC1.dwg
Job Number: EQUINOX MTN SKY
Prepared For: FORT LUPTON

0 25 50 100
1 inch = 50 ft. Horizontal

Designer	Drafter	Checked
BEM	BEM	GLP

Calibre
Calibre Engineering, Inc.
9090 South Ridgeline Boulevard, Suite 105
Highlands Ranch, CO 80129 (303) 730-0434
www.calibre-engineering.com
Construction Management Civil Engineering Surveying

MOUNTAIN SKY
CONSTRUCTION DOCUMENTS - FILING I
EROSION CONTROL PLAN

Sheet EC2 of 27 / 50

Date 30 JUNE 2016

PATH: P:\EQUINOX MTN SKY\CADD\CIVIL\20 - FINAL DEVELOPMENT PLAN PHASE I\20EC1.DWG
PLOTTED BY: Ben Murphy PLOT DATE: 6/30/2016 3:45 PM
XREFS: 20PPN, 20BASE, 20KMEC, 20TB, 10EPN,

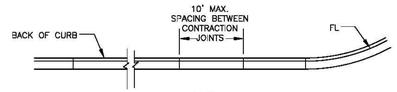

LAYOUT

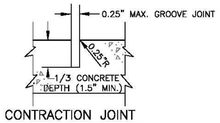

CONTRACTION JOINT

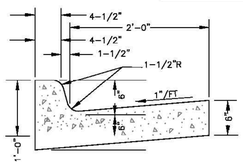

6" VERTICAL CURB & GUTTER

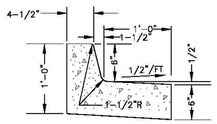

6" VERTICAL MEDIAN CURB & GUTTER

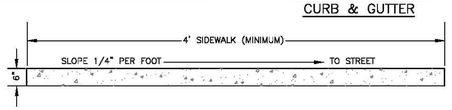

ATTACHED OR DETACHED WALK

CITY OF Fort Lupton EST 1836 COME PAINT YOUR FUTURE WITH US	DESIGN STANDARDS	STANDARD DRAWING
	VERTICAL CURB AND GUTTER	R7
		DATE: 8/15/14

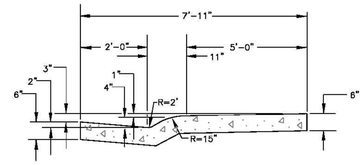

COMBINATION CURB, GUTTER & WALK STANDARD SECTION

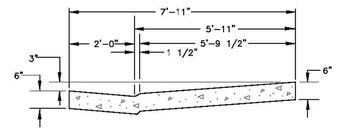

COMBINATION CURB, GUTTER & WALK DEPRESSED SECTION

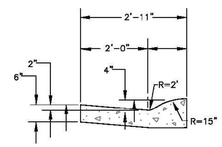

4" MOUNTABLE CURB & GUTTER

CITY OF Fort Lupton EST 1836 COME PAINT YOUR FUTURE WITH US	DESIGN STANDARDS	STANDARD DRAWING
	COMBINATION CURB, GUTTER, AND WALK	R8
		DATE: 8/15/14

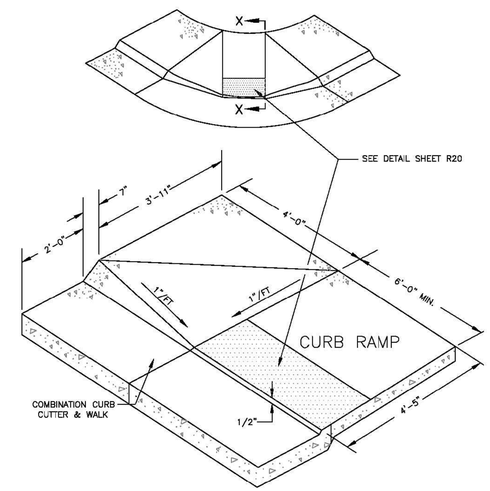

SECTION X–X

NOTE:

- COARSE BROOM FINISH ON RAMP.
- SPECIAL DESIGNS ARE REQUIRED WHEN GRADES ARE OVER 4% OR WHERE THE ANGLE OF THE INTERSECTION IS LESS THAN 78 DEGREES OR MORE THAN 105 DEGREES.
- MAINTAIN BACK OF WALK ELEVATION AT 2.0% ABOVE TOP OF CURB.

CITY OF Fort Lupton EST 1836 COME PAINT YOUR FUTURE WITH US	DESIGN STANDARDS	STANDARD DRAWING
	CURB RAMP COMBINATION CURB, GUTTER, AND WALK	R9
		DATE: 8/15/14

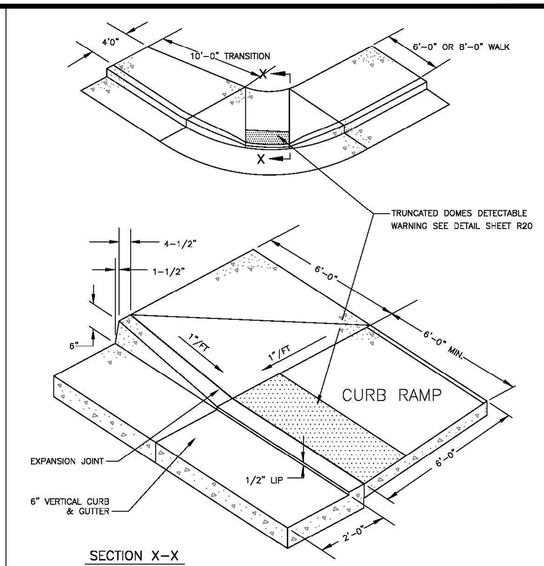

SECTION X–X

NOTE:
MIDBLOCK RAMP IS SAME AS ABOVE WITH 10 FOOT TRANSITIONS TO SIDEWALKS OF A DIFFERING DIMENSION OR A DETACHED WALK.

CITY OF Fort Lupton EST 1836 COME PAINT YOUR FUTURE WITH US	DESIGN STANDARDS	STANDARD DRAWING
	CURB RAMP BARRIER CURB AND WALK	R10
		DATE: 8/15/14

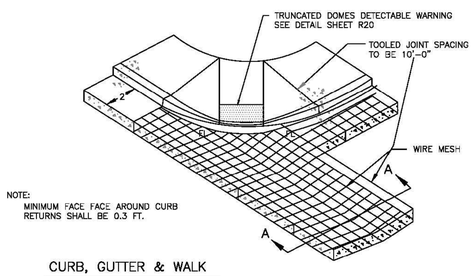

NOTE:
MINIMUM FACE FACE AROUND CURB RETURNS SHALL BE 0.3 FT.

CURB, GUTTER & WALK

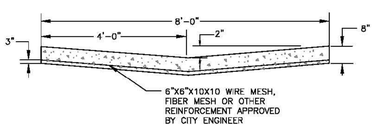

SECTION A–A

CITY OF Fort Lupton EST 1836 COME PAINT YOUR FUTURE WITH US	DESIGN STANDARDS	STANDARD DRAWING
	SIDEWALK RAMP WITH CROSS PAN	R11
		DATE: 8/15/14

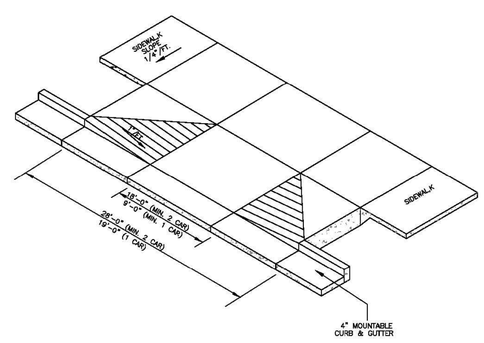

CITY OF Fort Lupton EST 1836 COME PAINT YOUR FUTURE WITH US	DESIGN STANDARDS	STANDARD DRAWING
	RAMP DRIVE FOR VERTICAL CURB / DETACHED WALK	R13
		DATE: 8/15/14

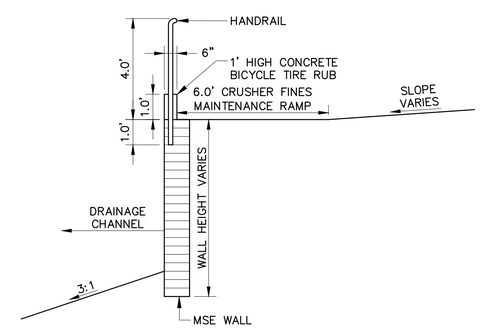

HANDRAIL AND TIRE RUB WALL DETAIL
N.T.S.

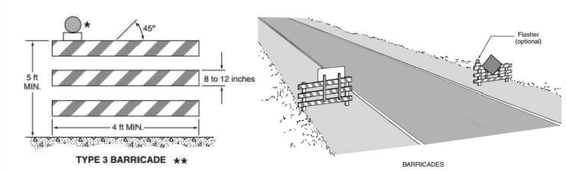

* Warning lights (optional)
** Rail stripe widths shall be 6 inches, except that 4-inch wide stripes may be used if rail lengths are less than 36 inches. The sides of barricades facing traffic shall have retroreflective rail faces.

TEMPORARY TYPE III BARRICADE

DATE	REVISION DESCRIPTION
6	
5	
4	
3	
2	
1	

Drawing Name: 20DT1.dwg	0 25 50 100 — 1 inch = 50 ft. Horizontal; 1 inch = 0 ft Vertical		
Job Number: EQUINOX MTN SKY			
Prepared For: FORT LUPTON	Designer: BEM	Drafter: BEM	Checked: GVM

Calibre
Calibre Engineering, Inc.
9090 South Ridgeline Boulevard, Suite 105
Highlands Ranch, CO 80129 (303) 730-0434
www.calibre-engineering.com
Construction Management Civil Engineering Surveying

MOUNTAIN SKY
CONSTRUCTION DOCUMENTS - FILING I
SITE DETAILS

Sheet **DT1** 28 of 50

Date 30 JUNE 2016

PATH: P:\EQUINOX MTN SKY\CADD\CIVIL\20 - FINAL DEVELOPMENT PLAN PHASE I\20DT1.DWG
PLOTTED BY: Ben Murphy PLOT DATE: 6/30/2016 3:46 PM
XREFS: 20TB

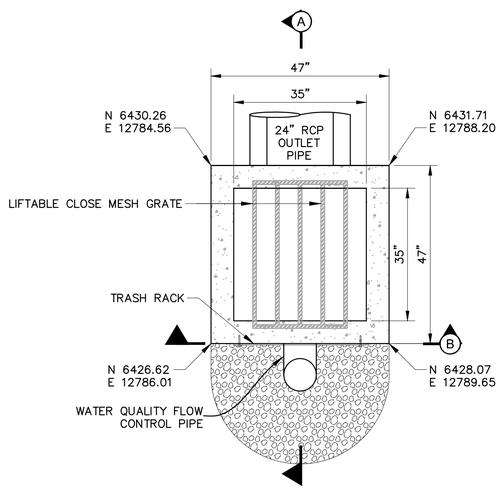

PLAN VIEW

N.T.S.

NOTE:
REBAR PLACEMENT AND SIZE PER CDOT STD M-604-10, LATEST EDITION.

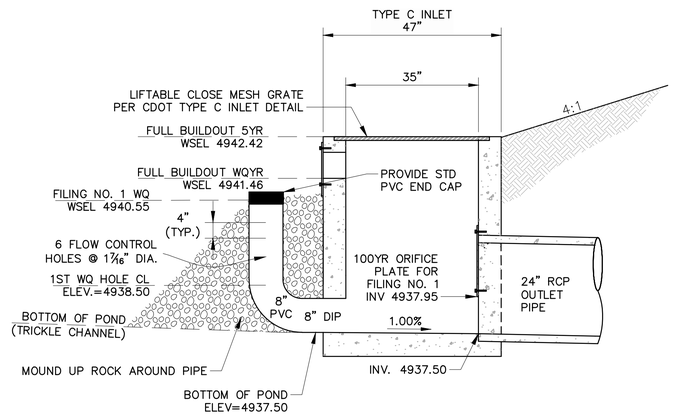

SECTION A-A

N.T.S.

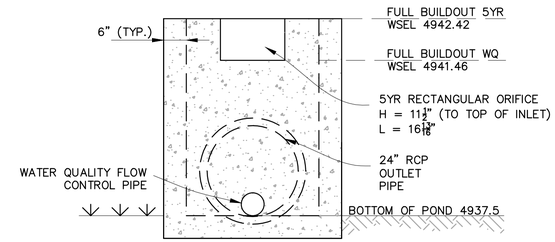

SECTION B-B

N.T.S.

NOTES:

WATER QUALITY PIPE

1. WQCV PIPE SHALL BE SCHEDULE 40 PVC OR GREATER.
2. SINGLE COLUMN OF FIVE HOLES EXCEPT WHERE THE HOLES EXCEED 1" DIAMETER, THEN UP TO TWO COLUMNS OF SAME SIZED HOLES MAY BE USED.
3. IN LIEU OF TRASH RACK, PACK UNIFORMLY SIZED 1 1/2- TO 2-INCH GRAVEL SURROUNDING THE PVC PIPE.

RECTANGULAR ORIFICE TRASH RACK

1. WELL-SCREEN TRASH RACK SHALL BE STAINLESS STEEL AND SHALL BE ATTACHED BY INTERMITTENT WELDS ALONG THE EDGE OF THE MOUNTAIN FRAME.
2. TRASH RACK WIDTHS PROVIDED ON TABLE OS-2A ON SHEET DT2 ARE FOR SPECIFIED TRASH RACK MATERIAL.

OVERFLOW TRASH RACK

1. TRASH RACK SHALL BE STAINLESS STEEL, ALUMINUM, OR STEEL. STEEL TRASH RACKS SHALL BE HOT DIP GALVANIZED AND MAY BE HOT POWDER COATED AFTER GALVANIZING.
2. TRASH RACK WITH BARS 6" MAX. ON CENTER.

EMBANKMENT

1. EMBANKMENT MATERIAL SHALL CONSIST OF SOIL FREE OF DEBRIS, ORGANIC MATERIAL, AND ROCKS OR CONCRETE GREATER THAN 3 INCHES AND SHALL HAVE A MINIMUM OF 15 PERCENT BY WEIGHT PASSING THE NO. 200 SIEVE.
2. EMBANKMENT SHALL BE COMPACTED TO AT LEST 95 PERCENT OF MAXIMUM DENSITY IN ACCORDANCE WITH ASTM D698.

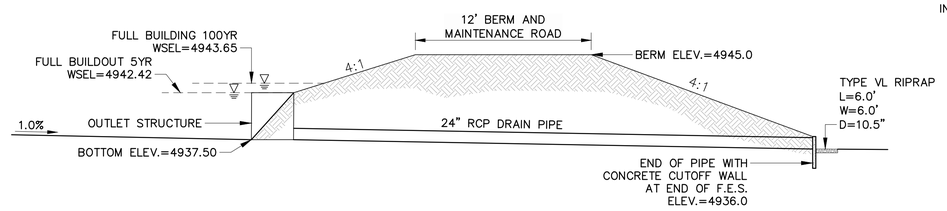

OULET PIPE DETAIL

N.T.S.

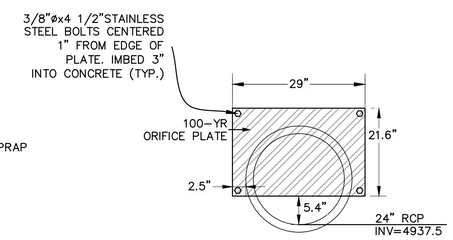

ORIFICE CONTROL PLATE DETAIL

N.T.S.

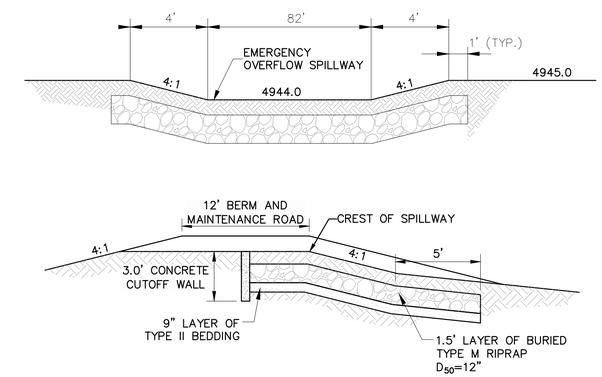

EMERGENCY OVERFLOW SPILLWAY

N.T.S.

POND VOLUME/DISCHARGE TABLE

STORM	RELEASE RATE	VOLUME REQUIRED	VOLUME PROVIDED
100-YR	XXX CFS	XXX ACRE-FT	XXX ACRE-FT
5-YR	XXX CFS	XXX ACRE-FT	XXX ACRE-FT
WQ	XXX CFS	XXX ACRE-FT	XXX ACRE-FT

PATH: P:\EQUINOX MTN SKY\CADD\CIVIL\20 - FINAL DEVELOPMENT PLAN PHASE I\20DT2.DWG
PLOTTED BY: Ben Murphy PLOT DATE: 6/30/2016 3:46 PM
XREFS: 10PUT, 20PPN, 20TB,

DATE	REVISION DESCRIPTION
	6
	5
	4
	3
	2
	1

Drawing Name: 20DT2.dwg
Job Number: EQUINOX MTN SKY
Prepared For: FORT LUPTON
Designer: BEM | Drafter: BEM | Checked: GVM

Calibre
Calibre Engineering, Inc.
9090 South Ridgeline Boulevard, Suite 105
Highlands Ranch, CO 80129 (303) 730-0434
www.calibre-engineering.com
Construction Management Civil Engineering Surveying

MOUNTAIN SKY
CONSTRUCTION DOCUMENTS - FILING I
POND OUTLET STRUCTURE DETAIL

Sheet DT2 of 29 / 50
Date 30 JUNE 2016

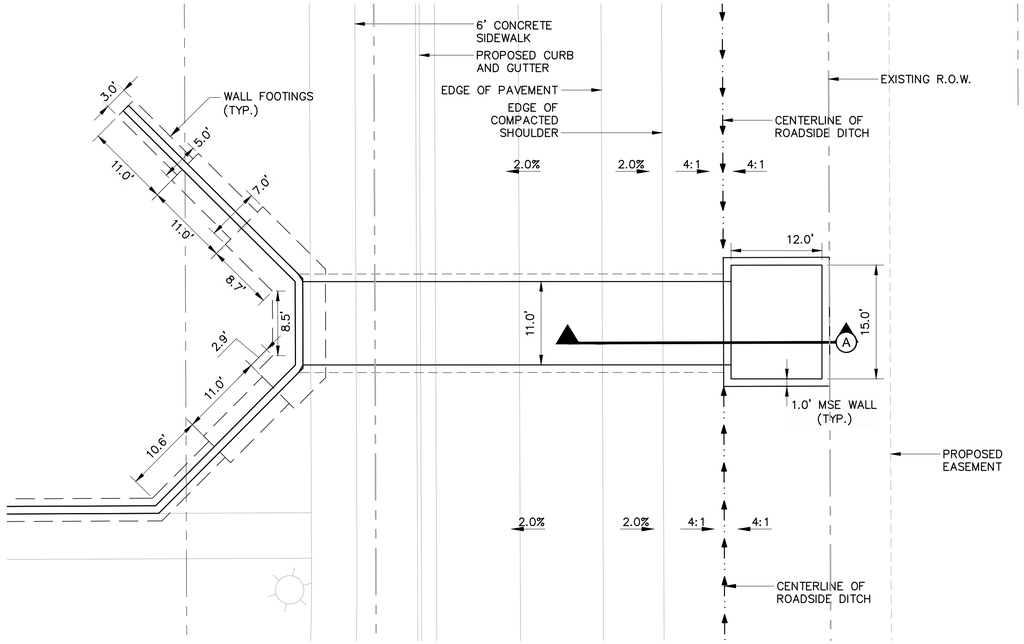

REINFORCED BOX CULVERT - PLAN VIEW

1"=10'

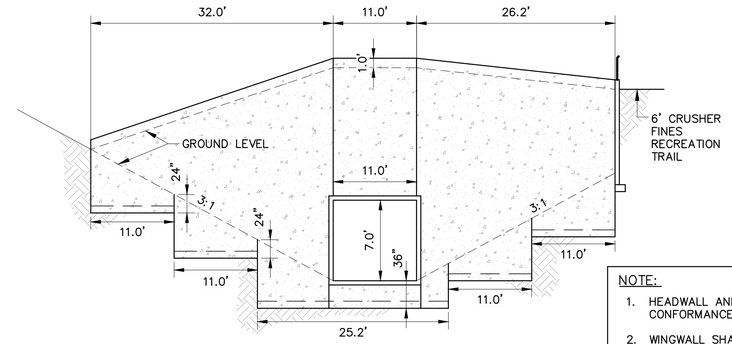

NOTE:

1. HEADWALL AND BOX CULVERT SHALL BE CONSTRUCTED IN CONFORMANCE WITH C-DOT M-601-1 SINGLE CONCRETE BOX CULVERT.
2. WINGWALL SHALL BE CONSTRUCTED IN CONFORMANCE WITH C-DOT M-601-20 – WINGWALLS FOR BOX CULVERTS.

ELEVATION OF HEADWALL

N.T.S.

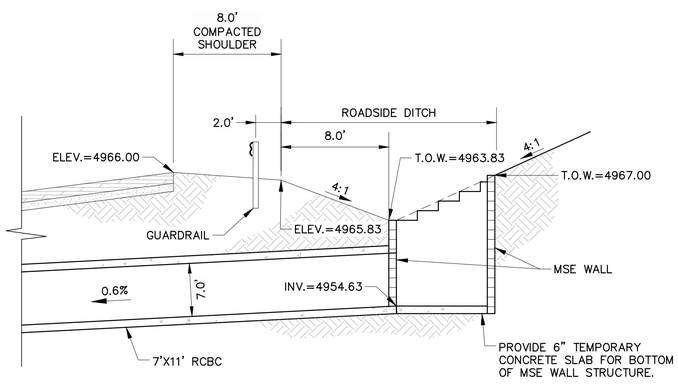

SECTION A-A - MSE WALLED DROP INLET

N.T.S.

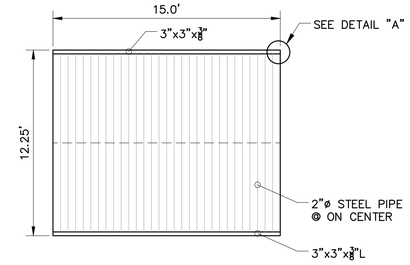

PIPE TRASH RACK

N.T.S.

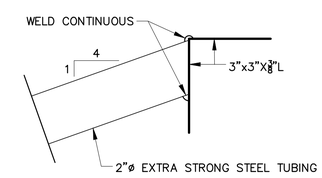

DETAIL A

N.T.S.

NOTE:

FOR EASE OF HANDLING, FABRICATE EITHER 2 PIECES AT 7.5'x12.25' OR 3 PIECES AT 5.0'x12.25'

DATE	REVISION DESCRIPTION
	6
	5
	4
	3
	2
	1

Drawing Name: 20DT2.dwg
Job Number: EQUINOX MTN SKY
Prepared For: FORT LUPTON
Designer: BEM | Drafter: BEM | Checked: GVM

Calibre
Calibre Engineering, Inc.
9090 South Ridgeline Boulevard, Suite 105
Highlands Ranch, CO 80129 (303) 730-0434
www.calibre-engineering.com
Construction Management Civil Engineering Surveying

MOUNTAIN SKY

CONSTRUCTION DOCUMENTS - FILING I

STORM SEWER DETAILS

Sheet DT3 30 of 50

Date 30 JUNE 2016

PATH: P:\EQUINOX MTN SKY\CADD\CIVIL\20 - FINAL DEVELOPMENT PLAN PHASE I\20DT2.DWG
PLOTTED BY: Ben Murphy PLOT DATE: 6/30/2016 3:46 PM
XREFS: 10PUT, 20PPN, 20TB,

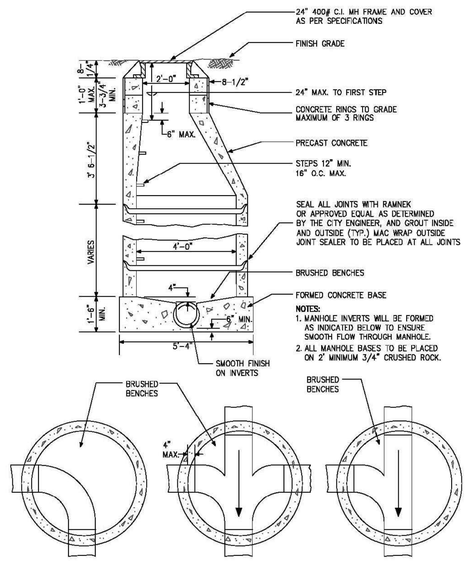

DESIGN STANDARDS	STANDARD DRAWING
SANITARY SEWER STANDARD MANHOLE	SS1
	DATE: 8/15/14

NOTES:

1. ALL JOINTS TO BE SET IN FLEXIBLE BUTYL RESIN SEALING COMPOUND AND PLASTERED WITH MORTAR 5/8" THICK AND EXTENDING 4" EACH SIDE OF JOINT INSIDE AND OUTSIDE.
2. MORTAR ON RISER RINGS IS ACCEPTABLE.
3. MANHOLES INSTALLED OUTSIDE OF STREET RIGHT-OF-WAY SHALL HAVE LOCKING COVERS.
4. "SEWER" TO BE IMPRINTED ON COVER.

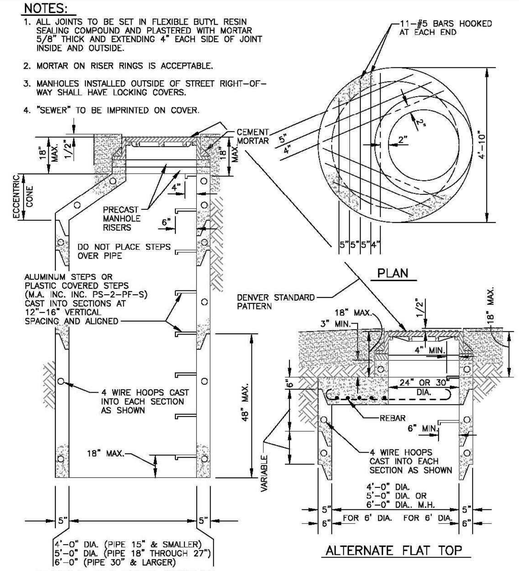

DESIGN STANDARDS	STANDARD DRAWING
MANHOLE BARRELS AND ALTERNATE TOPS	SS2
	DATE: 8/15/14

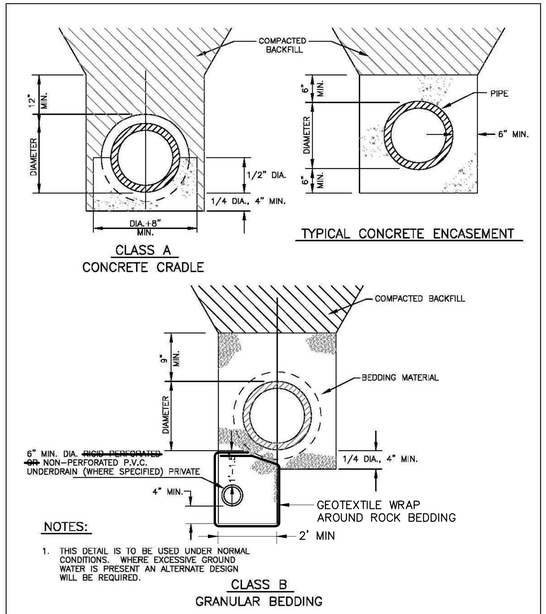

NOTES:

1. THIS DETAIL IS TO BE USED UNDER NORMAL CONDITIONS. WHERE EXCESSIVE GROUND WATER IS PRESENT AN ALTERNATE DESIGN WILL BE REQUIRED.

DESIGN STANDARDS	STANDARD DRAWING
TYPICAL PIPE BEDDING	SS6
	DATE: 8/15/14

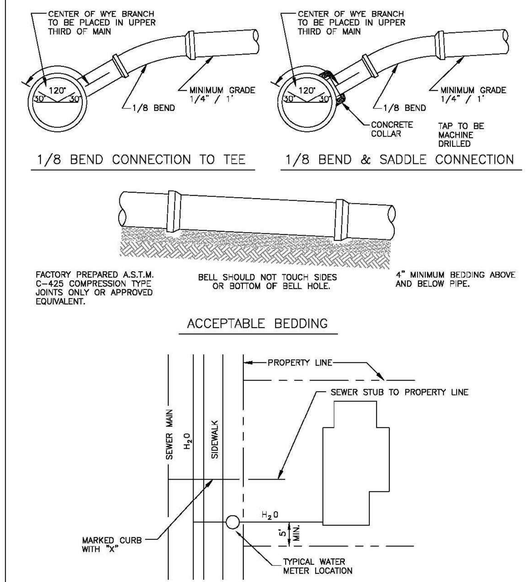

DESIGN STANDARDS	STANDARD DRAWING
TYPICAL HOUSE SERVICE LOCATION	SS7
	DATE: 8/15/14

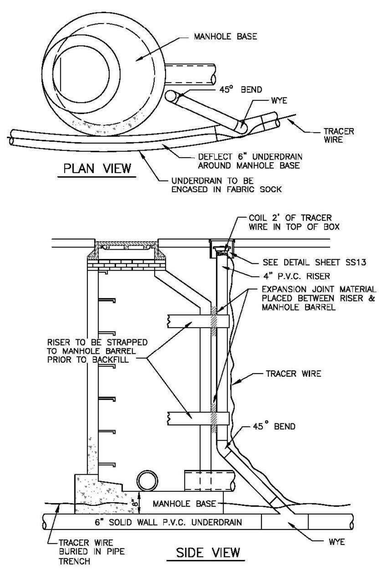

DESIGN STANDARDS	STANDARD DRAWING
TYPICAL UNDERDRAIN CLEAN-OUT DETAIL	SS10
	DATE: 8/15/14

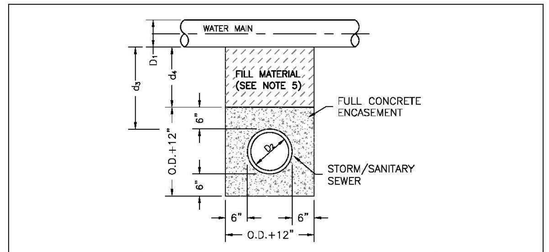

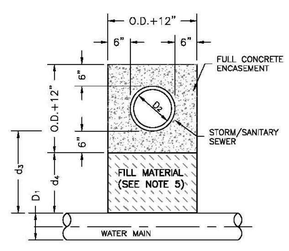

NOTES:

1. CONCRETE COLLAR AROUND STORM SEWER JOINTS MAY BE ACCEPTED WITH WRITTEN APPROVAL BY THE CITY ENGINEER AND ONLY FOR PIPE 30" OR LARGER.
2. CONCRETE TO BE CAST AGAINST UNDISTURBED SOIL OR SHORING.
3. LENGTH OF ENCASEMENT SHALL EXTEND AT LEAST 10-FEET EACH SIDE OF WATER MAIN.
4. UNLESS OTHERWISE NOTED ON PLAN/PROFILE DRAWINGS, ENCASEMENTS NEED NOT BE REINFORCED.
5. FILLER MATERIAL BETWEEN CONDUITS TO BE:
   a) APPROVED COMPRESSIBLE MATERIAL SUCH AS STYROFOAM, ETC. IF d4<6".
   b) COMPACTED BACKFILL, IF d4>6".
6. SHORING OR SHEETING, IF USED, TO BE CUT OFF AT TOP OF ENCASEMENT

DESIGN STANDARDS	STANDARD DRAWING
ENCASEMENT FOR CONDUIT CROSSING	SS11
	DATE: 8/15/14

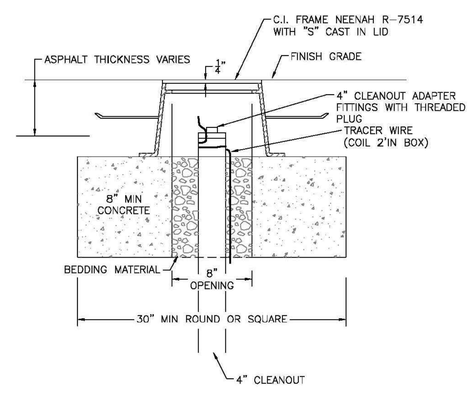

DESIGN STANDARDS	STANDARD DRAWING
UNDERDRAIN CLEANOUT COVER	SS13
	DATE: 8/15/14

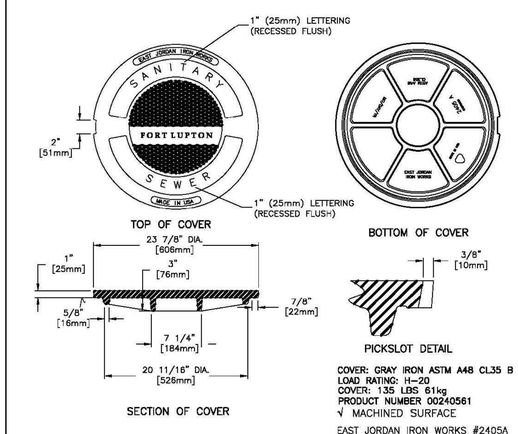

COVER: GRAY IRON ASTM A48 CL35 B
LOAD RATING: H-20
COVER: 135 LBS 61kg
PRODUCT NUMBER 00240561
√ MACHINED SURFACE

EAST JORDAN IRON WORKS #2405A
PRODUCT #240562

DESIGN STANDARDS	STANDARD DRAWING
SANITARY SEWER MANHOLE LID	SS12
	DATE: 8/15/14

DATE	REVISION DESCRIPTION
	6
	5
	4
	3
	2
	1

Drawing Name: 20DT3.dwg
Job Number: EQUINOX MTN SKY
Prepared For: FORT LUPTON
0 25 50 100
1 inch = 50 ft. Horizontal
1 inch = 0 ft Vertical

Designer	Drafter	Checked
BEM	BEM	GVM

Calibre
Calibre Engineering, Inc.
9090 South Ridgeline Boulevard, Suite 105
Highlands Ranch, CO 80129 (303) 730-0434
www.calibre-engineering.com
Construction Management Civil Engineering Surveying

MOUNTAIN SKY
CONSTRUCTION DOCUMENTS - FILING I
SANITARY SEWER DETAILS

Sheet DT4

Date 30 JUNE 2016

PATH: P:\EQUINOX MTN SKY\CADD\CIVIL\20 - FINAL DEVELOPMENT PLAN PHASE I\20DT3.DWG
PLOTTED BY: Ben Murphy PLOT DATE: 6/30/2016 3:47 PM
XREFS: 20TB,

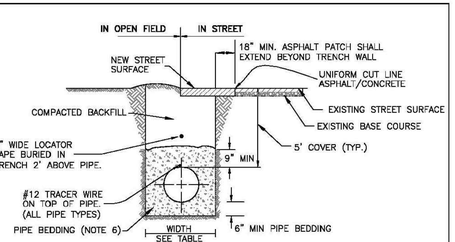

TYPICAL TRENCH SECTION

TRENCH WIDTH

PIPE DIAMETER	MINIMUM WIDTH	MAXIMUM WIDTH
4"	1'-4"	2'-4"
6"	1'-6"	2'-6"
8"	1'-8"	2'-8"
12"	2'-0"	3'-0"
16"	2'-4"	3'-4"
20"	2'-8"	3'-8"
24"	4'-0"	5'-0"

NOTES:

1. TRENCHES 5 FT DEEP OR GREATER REQUIRE A "PROTECTIVE SYSTEM" AS DEFINED BY OSHA. TRENCHES 20 FT DEEP OR GREATER REQUIRE THAT THE PROTECTIVE SYSTEM BE DESIGN BY A REGISTERED PROFESSIONAL ENGINEER.
2. OSHA'S STANDARDS REQUIRE THAT TRENCHES BE INSPECTED DAILY AND AS CONDITIONS CHANGE BY A "COMPETENT PERSON" (AS DEFINED BY OSHA) PRIOR TO WORKER ENTRY TO ENSURE ELIMINATION OF EXCAVATION HAZARDS. FOR ADDITIONAL INFORMATION REGARDING OSHA REQUIREMENTS CALL 1-800-321-OSHA.
3. MINIMUM COVER OVER PIPE TO BE BELOW OFFICIAL STREET GRADE.
4. FOR PIPE BEDDING REQUIREMENTS REFER TO CHAPTER 9 OF THE STANDARDS AND SPECIFICATIONS.
5. PIPE BEDDING SHALL BE PLACED AGAINST UNDISTURBED SOIL IN THE TRENCH BOTTOM, HOWEVER, WHERE ADVERSE SOIL IS ENCOUNTERED IN THE TRENCH BOTTOM, SOIL SHALL BE REMOVED AND TRENCH STABILIZATION MATERIAL SHALL BE PLACED IN ACCORDANCE WITH THE RECOMMENDATIONS OF A GEOTECHNICAL ENGINEER.

DESIGN STANDARDS	STANDARD DRAWING
TYPICAL TRENCH SECTION PIPE PROTECTION	W1
	DATE: 8/15/14

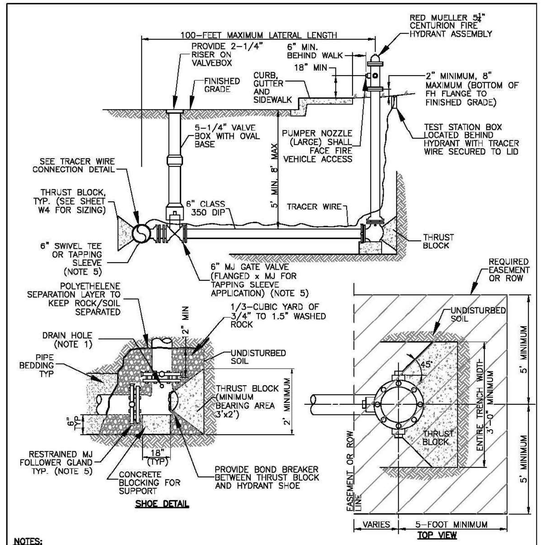

NOTES:

1. ALL FITTINGS, DI PIPE, AND HYDRANT BARREL SHALL BE POLYETHYLENE WRAPPED PER AWWA C-105. PROVIDE PERFORATION AT HYDRANT DRAIN HOLES.
2. PRIOR TO PUTTING INTO SERVICE THE FOLLOWING SHALL BE PERFORMED: NOZZLE THREADS SHALL BE GREASED, OIL RESERVOIR SHALL BE FILLED, AND HYDRANTS SHALL BE BRUSH PAINTED FIRE ENGINE RED (#7407).
3. THE ENTIRE PIPING ASSEMBLY (HYDRANT SHOE TO CONNECTION AT MAIN) SHALL BE FULLY RESTRAINED.

DESIGN STANDARDS	STANDARD DRAWING
FIRE HYDRANT INSTALLATION DETAIL	W2
	DATE: 8/15/14

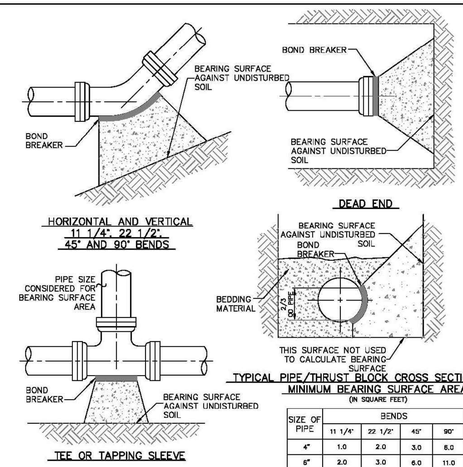

MINIMUM BEARING SURFACE AREA
(IN SQUARE FEET)

SIZE OF PIPE	BENDS				TEE OR DEAD END
	11 1/4°	22 1/2°	45°	90°	
4"	1.0	2.0	3.0	6.0	4.0
6"	2.0	3.0	6.0	11.0	8.0
8"	3.0	6.0	11.0	19.0	14.0
12"	6.0	12.0	22.0	40.0	29.0
16"	10.0	20.0	38.0	70.0	50.0
20"	15.0	30.0	59.0	108.0	46.0
24"	22.0	43.0	84.0	154.0	110.0

NOTES:

1. BEARING SURFACES SHOWN IN CHART ARE MINIMUM.
2. BEARING SURFACES ARE BASED ON 150 PSI INTERNAL PIPE PRESS PLUS WATER HAMMER.
   4", 6", 8" AND 12" WATER HAMMER = 110 PSI
   16", 20" AND 24" WATER HAMMER = 70 PSI
3. BEARING SURFACE CALCULATIONS ARE BASED ON 900 PSF SOIL BEARING CAPACITY.
4. ALL DUCTILE IRON AND CAST IRON PIPE AND FITTINGS SHALL BE WRAPPED IN POLYETHYLENE AND SECURELY TAPED PRIOR TO PLACING TRUST BLOCKS.
5. NO COMPACTION SHALL BE ALLOWED ABOVE THRUST BLOCKS FOR A MINIMUM OF 24 HOURS AFTER PLACEMENT. CONCRETE MUST CURE A MIN. OF 48 HOURS PRIOR TO FILLING LINES.

DESIGN STANDARDS	STANDARD DRAWING
CONCRETE THRUST BLOCKS - BEARING SURFACES AND INSTALLATION	W3
	DATE: 8/15/14

MINIMUM DIMENSIONS FOR THRUST BLOCKS

FITTING SIZE	TEES & PLUGS		90° BEND		45° BENDS & WYES	
	A	B	A	B	A	B
4"	1'-7"	1'-2"	1'-9"	1'-6"	1'-8"	0'-10"
6"	2'-0"	1'-11"	2'-5"	2'-2"	1'-10"	1'-7"
8"	2'-8"	2'-6"	3'-2"	3'-0"	2'-5"	2'-1"
10"	3'-4"	3'-3"	4'-0"	3'-10"	3'-0"	2'-9"
12"	4'-0"	3'-10"	4'-8"	4'-8"	3'-8"	3'-3"
14"	5'-5"	3'-10"	6'-6"	4'-11"	4'-9"	3'-5"
20"	5'-0"	5'-0"	6'-0"	6'-0"	5'-0"	4'-0"
24"	6'-0"	6'-0"	7'-0"	7'-0"	5'-0"	5'-0"
30"	7'-6"	7'-6"	8'-0"	8'-0"	6'-3"	6'-3"

FITTING SIZE	REDUCERS & 22 1/2° BENDS		11 1/4° BENDS	
	A	B	A	B
4"	1'-7"	0'-6"	0'-6"	0'-6"
6"	1'-9"	0'-10"	1'-0"	0'-6"
8"	1'-9"	1'-6"	1'-0"	1'-0"
10"	2'-2"	1'-11"	1'-6"	1'-0"
12"	2'-7"	2'-3"	2'-0"	1'-0"
14"	3'-5"	2'-5"	2'-0"	1'-6"
20"	3'-6"	3'-0"	3'-0"	2'-0"
24"	4'-6"	3'-0"	3'-0"	3'-0"
30"	4'-9"	4'-6"	3'-3"	3'-3"

GENERAL NOTES:

1. BEARING SURFACE AREAS SHOWN IN CHART ARE MINIMUM.
2. BASED ON 150 P.S.I. INTERNAL PIPE PRESSURE.
3. SOIL BEARING CAPACITY = 2000 LB./SQ. FT.
4. ALL FITTINGS TO BE WRAPPED WITH POLYETHYLENE (MINIMUM 8 MIL.).

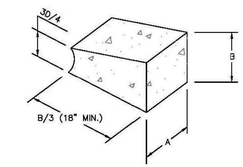

NOT TO SCALE

DESIGN STANDARDS	STANDARD DRAWING
TYPICAL TRENCH BLOCK DIMENSIONS	W4
	DATE: 8/15/14

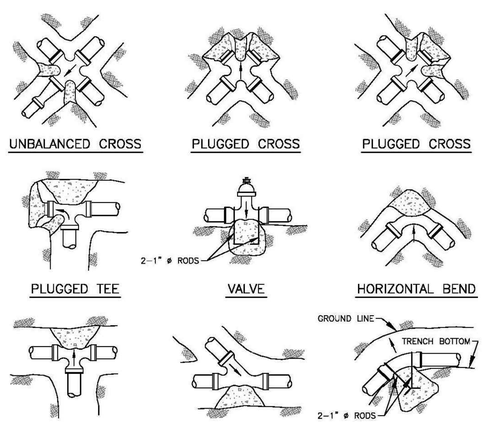

NOTES:

1. SIZE OF BLOCK TO BE A MINIMUM OF 18" THICK.
2. ALL BLOCKING TO BE ON UNDISTURBED MATERIAL.

DESIGN STANDARDS	STANDARD DRAWING
CONCRETE THRUST BLOCK FOR UNBALANCED SURFACES	W5
	DATE: 8/15/14

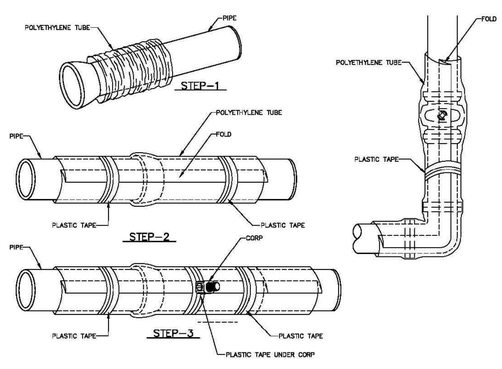

FIELD INSTALLATION-POLYETHYLENE WRAP

STEP-1 PLACE TUBE OF POLYETHYLENE MATERIAL AROUND PIPE PRIOR TO LOWERING PIPE INTO TRENCH.

STEP-2 PULL THE TUBE OVER THE LENGTH OF THE PIPE. TAPE TUBE TO PIPE AT JOINT. FOLD MATERIAL AROUND THE ADJACENT SPIGOT END AND WRAP WITH TAPE TO HOLD THE PLASTIC TUBE IN PLACE.

STEP-3 OVERLAP FIRST TUBE WITH ADJACENT TUBE AND SECURE WITH PLASTIC ADHESIVE TAPE. THE POLYETHYLENE TUBE MATERIAL COVERING THE PIPE SHALL BE LOOSE. EXCESS MATERIAL SHALL BE NEATLY DRAWN UP AROUND THE PIPE BARREL, FOLDED ON TOP OF THE PIPE AND TAPED IN PLACE.

NOTE: POLYETHYLENE SHALL BE MINIMUM 8-MIL THICKNESS

DESIGN STANDARDS	STANDARD DRAWING
POLYETHYLENE WRAP	W6
	DATE: 8/15/14

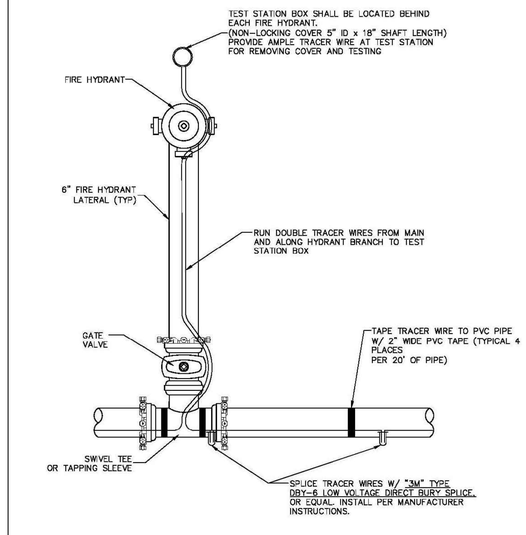

DESIGN STANDARDS	STANDARD DRAWING
TRACER WIRE	W7
	DATE: 8/15/14

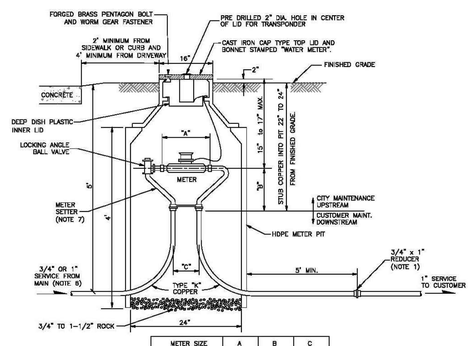

METER SIZE	A	B	C
3/4"	9"	9"	5"
1"	10-3/4"	10"	6"

NOTES:

1. UPSIZING OF SERVICE PIPES AFTER THE METER REQUIRES THE APPROVAL OF THE BUILDING DEPARTMENT. FOR SERVICE PIPES UPSIZED FROM 3/4" TO 1", A REDUCER SHALL BE INSTALLED AS SHOWN ON THIS DETAIL.
2. ONLY COMPRESSION FITTINGS WILL BE ALLOWED ON COPPER SERVICE PIPES. FOR APPROVED MANUFACTURERS AND MODEL NUMBERS OF FITTINGS, REFER TO CHAPTER 3 OF THE CITY STANDARDS.
3. THIS DETAIL IS NOT INTENDED FOR INSTALLATION IN STREETS, DRIVEWAYS, OR CONCRETE AREAS.
4. METER PIT SHALL NE LOCATED IN A SOD OR MULCH AREA WITH A 10' MIN. WIDTH UTILITY EASEMENT. NO TREES, SHRUBS, OR STRUCTURES SHALL BE LOCATED IN THE EASEMENT.
5. SERVICE LINES TO THE METER PIT SHALL BE INSTALLED PERPENDICULAR TO THE WATER MAIN.
6. FOR 3/4" RESIDENTIAL METER INSTALLATIONS, NEWLY INSTALLED SERVICE LINES FROM MAIN SHALL BE 1". EXISTING 3/4" SERVICE LINES MUST BE REVIEWED AND APPROVED FOR CONFORMANCE WITH RESIDENTIAL FIRE SPRINKLER SYSTEM REQUIREMENTS.
7. PROPER METER SETTERS SHALL BE INSTALLED TO ACCOMMODATE SERVICE LINE SIZES FROM MAIN AND TO CUSTOMER. REFER TO SECTION 3.6.5.08 OF THE CITY WATER SYSTEM STANDARDS FOR ACCEPTABLE SETTER MODEL NUMBERS.

DESIGN STANDARDS	STANDARD DRAWING
3/4" & 1" DOMESTIC METER SETS	W8
	DATE: 8/15/14

DATE	REVISION DESCRIPTION
	6
	5
	4
	3
	2
	1

Drawing Name: 20DT4.dwg
Job Number: EQUINOX MTN SKY
Prepared For: FORT LUPTON
Designer: BEM | Drafter: BEM | Checked: GVM

Calibre
Calibre Engineering, Inc.
9090 South Ridgeline Boulevard, Suite 105
Highlands Ranch, CO 80129 (303) 730-0434
www.calibre-engineering.com
Construction Management Civil Engineering Surveying

MOUNTAIN SKY
CONSTRUCTION DOCUMENTS - FILING I
WATER DETAILS

Sheet DT5 of 32 / 50
Date 30 JUNE 2016

PATH: P:\EQUINOX MTN SKY\CADD\CIVIL\20 - FINAL DEVELOPMENT PLAN PHASE I\20DT4.DWG
PLOTTED BY: Ben Murphy PLOT DATE: 6/30/2016 3:47 PM
XREFS: 20TB,

GENERAL NOTES

1. NOT FOR INSTALLATION IN ROADWAYS, DRIVEWAYS, PARKING AREAS, SIDEWALKS, OR CONCRETE. EDGE OF METER PIT LID SHALL NOT BE CLOSER THAN 4' FROM EDGE OF DRIVEWAY.
2. IF SURFACE IS NOT TO OFFICIAL GRADE WHEN THE METER IS INSTALLED, THE OWNER MUST RAISE OR LOWER THE PIT, METER SETTER AND ALL OTHER APPURTENANCES TO THE FINAL APPROVED GRADE.
3. METER SHALL BE SET WITHIN PUBLIC R.O.W OR PUBLIC EASEMENT.
4. NO CONCRETE FLOOR TO BE LAID IN METER PIT.
5. METER PIT SHALL BE CONSTRUCTED OF MODIFIED HI-DENSITY POLYETHELENE.
6. ADJUSTMENT RINGS SHALL BE 2", 3", 4" OR 6" IN HEIGHT AND SHALL BE INSERTED ABOVE THE POLYETHYLENE METER PIT.
7. FOR WATER SERVICE LINES 1" AND LARGER: IF THE METER PIT IS NOT INSTALLED WITHIN THE PUBLIC R.O.W. THEN A CURB STOP AND BOX SHALL BE INSTALLED WITHIN THE PUBLIC R.O.W.

(PAGE 2 OF 2)

DESIGN STANDARDS	STANDARD DRAWING
3/4" & 1" METER NOTES	W9
	DATE: 8/15/14

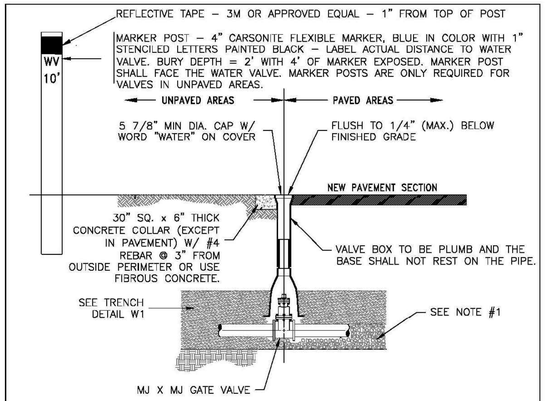

NOTES:
1. CARE SHALL BE TAKEN WHEN INSTALLING VALVES TO ASSURE PROPER SUPPORT OF THE VALVE. THE CITY ENGINEER MAY REQUIRE 3/4" CRUSHED ROCK TO BE INSTALLED UNDER THE VALVE TO PROVIDE PROPER SUPPORT.
2. VALVES SHALL NOT BE PLACED IN CONCRETE SIDEWALKS, CROSS PANS, GUTTERS, OR OTHER DRAINAGE WAYS.
3. OPERATING NUTS OR EXTENSIONS SHALL NOT BE SET CLOSER THAN TWO (2) FEET FROM FINAL GRADE. IF THE OPERATING NUT IS DEEPER THAN FIVE (5) FEET FROM FINAL GRADE, PROVIDE A 1 1/4" EXTENSION SHAFT W/ CENTERING RING. OPERATOR EXTENSIONS SHALL BE CONNECTED TO THE VALVE OPERATOR NUT USING A PIN. THE EXTENSION SHAFT SHALL INCLUDE A 1/4" THICK TRASH RING LOCATED 6" BELOW THE NON-RISING PORTION OF THE VALVE BOX. THE DIAMETER OF THE TRASH RING SHALL BE 1/8" LESS THAN THE INSIDE DIAMETER OF THE VALVE BOX.
4. GATE VALVE SHALL BE POLYETHYLENE WRAPPED (8 MIL).
5. CONCRETE COLLARS & MARKER POSTS ARE REQUIRED WHEN VALVE IS LOCATED IN AN UNPAVED AREA.
6. VALVE BOXES ARE TO BE BROUGHT UP TO GRADE AT THE TIME OF PAVEMENT PLACEMENT OR OVERLAY. VALVE BOX ADJUSTING RINGS ARE NOT ALLOWED.

DESIGN STANDARDS	STANDARD DRAWING
VALVE BOX Duplicate Label	W1
	DATE: 8/15/14

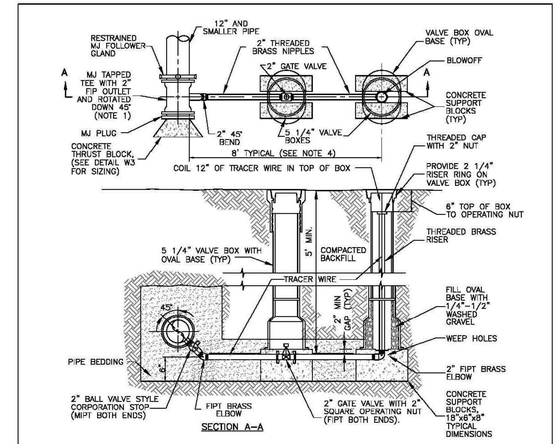

NOTES:
1. MJ TAPPED TEE CAN BE SUBSTITUTED WITH A 2" TAPPING SADDLE. PROVIDE A MINIMUM OF 24" BETWEEN THE TAP LOCATION AND THE HOST PIPE PLUG. A RESTRAINED MJ PLUG IS REQUIRED ON THE HOST PIPE.
2. ALL 2" FITTINGS AND PIPE SHALL BE BRASS.
3. ALL IRON PIPE AND FITTINGS SHALL BE WRAPPED IN POLYETHELYENE AND SECURELY TAPED PRIOR TO PLACING THRUST BLOCKS.

DESIGN STANDARDS	STANDARD DRAWING
STANDARD BLOWOFF ASSEMBLY 12" AND SMALLER WATERLINES	W16
	DATE: 8/15/14

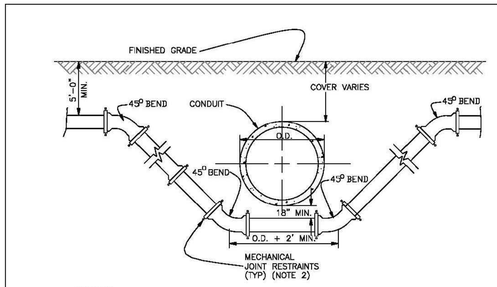

NOTES:
1. SEWER LINES CROSSING ABOVE WATER MAINS SHALL BE PVC C900 PRESSURE PIPE AND EXTEND 9' EACH SIDE OF CROSSING (MIN.).
2. MECHANICAL JOINT RESTRAINTS SHALL BE PROVIDED AT ALL JOINTS IN THE LOWERING AND FOR THE SPECIFIED DISTANCE BACK FROM THE LOWERING AS DESIGNED BY THE ENGINEER OF RECORD.
3. WATER MAINS CROSSING CULVERTS THAT ARE EXPOSED TO THE ELEMENTS SHOULD BE EVALUATED FOR FREEZE POTENTIAL.
4. A BORED CROSSING MAY BE REQUIRED FOR THE WATERMAIN.
5. CATHODIC PROTECTION MAY BE REQUIRED FOR THE DUCTILE IRON WATER MAINS AS SPECIFIED BY THE ENGINEER.

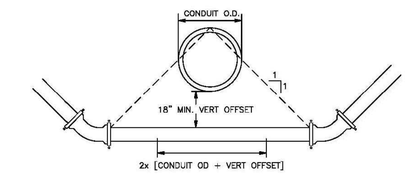

DESIGN STANDARDS	STANDARD DRAWING
CONDUIT CROSSING	W18
	DATE: 8/15/14

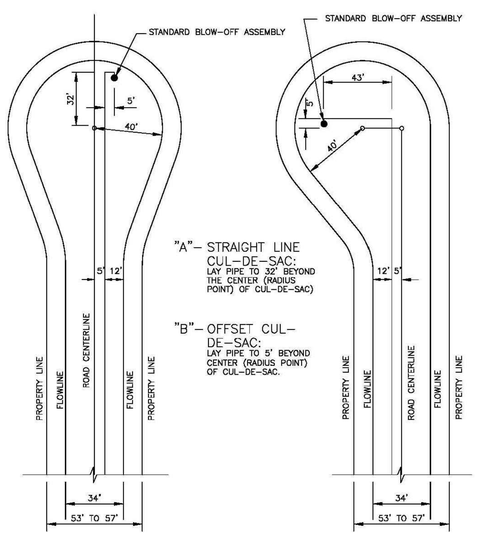

"A"– STRAIGHT LINE CUL-DE-SAC:
LAY PIPE TO 32' BEYOND THE CENTER (RADIUS POINT) OF CUL-DE-SAC)

"B"– OFFSET CUL-DE-SAC:
LAY PIPE TO 5' BEYOND CENTER (RADIUS POINT) OF CUL-DE-SAC.

DESIGN STANDARDS	STANDARD DRAWING
WATER DISTRIBUTION SYSTEM TYPICAL PLAN FOR CUL-DE-SAC	W21
	DATE: 8/15/14

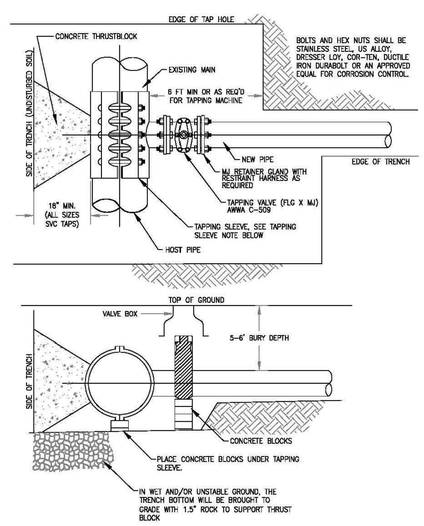

NOTES:
1. THE CITY SHALL BE NOTIFIED AT LEAST 48 HOURS PRIOR TO TAPPING. THE CITY'S REPRESENTATIVE SHALL BE ON SITE DURING TAPPING.
2. ALL CAST IRON / DUCTILE IRON FITTINGS TO RECEIVE DOUBLE POLY WRAP PRIOR TO BACKFILL OR POURING OF CONCRETE KICKERS.

DESIGN STANDARDS	STANDARD DRAWING
WET TAP CONNECTION - 4" AND LARGER TAP	W25
	DATE: 8/15/14

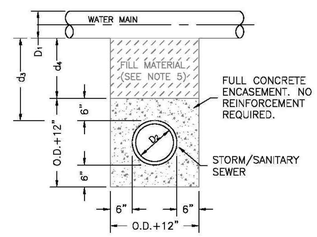

STORM OR SANITARY SEWER CROSSING UNDER WATER MAIN
IF d_3 >18" AN ENCASEMENT IS NOT REQUIRED

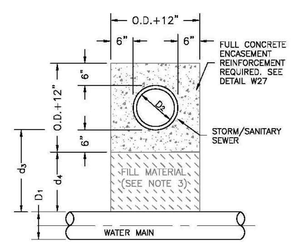

NOTES:
1. CONCRETE TO BE CAST AGAINST UNDISTURBED SOIL OR SHORING.
2. LENGTH OF ENCASEMENT SHALL EXTEND AT LEAST 9-FEET EACH SIDE OF WATER MAIN.
3. FILLER MATERIAL BETWEEN CONDUITS TO BE APPROVED COMPRESSIBLE MATERIAL SUCH AS STYROFOAM, ETC. IF d_4≤6", COMPACTED BACKFILL. IF d_4>6".
4. SHORING OR SHEETING, IF USED, TO BE CUT OFF AT TOP OF ENCASEMENT
5. A REINFORCED ENCASEMENT IS REQUIRED FOR ALL CONDUITS CROSSING OVER WATERMAINS BUT ENCASEMENTS ARE NOT REQUIRED TO BE REINFORCED IF CROSSING UNDER WATERMAINS.

STORM OR SANITARY SEWER CROSSING OVER TOP OF WATER MAIN
REINFORCED ENCASEMENT REQUIRED REGARDLESS OF DIMENSION d_3

DESIGN STANDARDS	STANDARD DRAWING
ENCASEMENT FOR CONDUIT CROSSING	W26
	DATE: 8/15/14

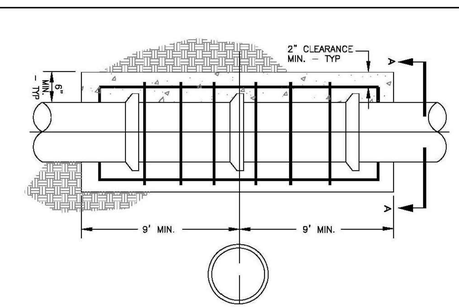

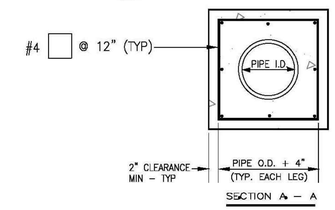

PIPE I.D.	NO. OF LONGITUDINAL BARS & LOCATION	
6" TO 8"	4 – #4 BARS	1 EACH CORNER
10" TO 18"	8 – #4 BARS	3 EACH SIDE
21" TO 33"	12 – #4 BARS	4 EACH SIDE
36"	16 – #4 BARS	5 EACH SIDE

DESIGN STANDARDS	STANDARD DRAWING
CONCRETE ENCASEMENT REINFORCEMENT DETAIL	W27
	DATE: 8/15/14

DATE		REVISION DESCRIPTION
	6	
	5	
	4	
	3	
	2	
	1	

Drawing Name: 20DT4.dwg
Job Number: EQUINOX MTN SKY
Prepared For: FORT LUPTON
Designer: BEM | Drafter: BEM | Checked: GVM

Calibre
Calibre Engineering, Inc.
9090 South Ridgeline Boulevard, Suite 105
Highlands Ranch, CO 80129 (303) 730-0434
www.calibre-engineering.com
Construction Management Civil Engineering Surveying

MOUNTAIN SKY
CONSTRUCTION DOCUMENTS - FILING I
WATER DETAILS

Sheet DT6 — 33 of 50
Date 30 JUNE 2016

PATH: P:\EQUINOX MTN SKY\CADD\CIVIL\20 - FINAL DEVELOPMENT PLAN PHASE I\20DT4.DWG
PLOTTED BY: Ben Murphy PLOT DATE: 6/30/2016 3:47 PM
XREFS: 20TB,