City of Fort Lupton

City Council Agenda
Regular Meeting (Virtual)
April 7, 2020
7:00 p.m.
130 South McKinley Avenue
Virtual Meeting Instructions are located at end of the Agenda

Pledge Of Allegiance

Call To Order - Roll Call

Persons To Address Council

This portion of the Agenda is provided to allow members of the audience to present comments to the City Council. The City Council may not respond to your comments this evening, rather they may take your comments and suggestions under advisement or your question may be directed to the appropriate staff member for follow-up. Please limit the time of your comments to three (3) minutes - Mayor Stieber

Approval Of Agenda

Review Of Accounts Payables

a. **04072020 Accounts Payable**

Documents:

04072020 Accounts Payable.pdf

Consent Agenda

Consent Agenda items are considered to be routine and will be enacted by one motion and vote. There will be no separate discussion of Consent Agenda items unless a Councilmember so requests, in which case the item may be removed/moved from the Consent Agenda.

a. **03172020 City Council Meeting Minutes**

Documents:

03172020 City Council Meeting Minutes.pdf

b. **Second Reading Ordinance 2020-1080 An Ordinance Amending Chapter 2, Article VII, Section 2-182 Membership, Appointment; Terms, Of The Fort Lupton Municipal Code**

Documents:

Second Reading Ordinance 2020-1080 Section 2-182 Terms And Membership Of Planning Commission.pdf

c. **Second Reading Ordinance 2020-1081 An Ordinance Amending Chapter 16, Article I, Section 16-11, Board Of Adjustment, Of The Fort Lupton Municipal Code**

Documents:

Second Reading Ordinance 2020-1081 Section 16-11 Board Of Adjustment.pdf

Public Hearings

Public Hearings allow members of the audience to present comments and questions to the City Council on the item being presented. Comments and questions may be limited to three (3) minutes- Mayor Stieber

a. **Continuance Request For The Murata Farms Sketch PUD Plat**

Documents:

04-07-20 Murata Farms Sketch Memo To CC (Hearing Continuance).Pdf

b. **Continuance Request For The Conner Family Trust - Fort Lupton Fire Protection District Minor Subdivision**

Documents:

04-07-20 Conner Family Trust Memo To CC (Hearing Continuance).Pdf

Action Memorandum

a. **AM 2020-071 Approving A Resolution Declaring The City Of Fort Lupton A 'Second Amendment Sanctuary City'**

Documents:

AM 2020-071 Approving A Resolution Declaring The City Of Fort Lupton A Second Amendment Sanctuary City.pdf

b. **AM 2020-072 An Emergency Ordinance Enacting Section 2-34 Emergency Or Disaster Declared, Section 2-35 Electronic Meetings, Section 2-36 Emergency Meetings, Section 2-37 Effect On Existing Laws, Of The Fort Lupton Municipal Code And Declaring An Emergency**

Documents:

AM 2020-072 An Emergency Ordinance Enacting Section Of The Municipal Code Setting Forth Procedures During Declared Emergency.pdf

c. **AM 2020-073 Establishing A Policy For City Council Meeting Special Procedures During Declared Emergencies**

Documents:

AM 2020-073 Establishing Policy For City Council Meeting Special Proceduring During Declared Emergencies.pdf

d. **AM 2020-074 Police Equipment Purchase/Installation For Four (4) Patrol Vehicles For A Total Of $91,555.68 Allocated From The General Fund**

Documents:

AM 2020-074 Police Equipment Purchase And Installation For Four Vehicles.pdf

e. **AM 2020-075 Approve Emergency Repairs To The Floating Pumps At The Perry Pit By Arvada Pump For An Amount Not To Exceed $6,292.00 Allocated From The Utility Fund's Water Storage Department**

Documents:

AM 2020-075 Approve Emergency Repairs To The Floating Pumps At The Perry Pit By Arvada Pump.pdf

f. **AM 2020-076 Award Contract To AJI Irrigation Inc. For An Amount Not To Exceed $217,000 For Irrigation Booster Pumps Project From Water Sales Tax Fund**

Documents:

AM 2020-076 Award Contract To AJI Irrigation For Irrigation Booster Pumps Project.pdf

Staff Reports

Mayor/Council Reports

Future City Events

a. **04072020 Upcoming Events And Cancellations**

Documents:

04072020 Upcoming Events.pdf

Adjourn

Virtual Meeting Instructions

NOTE: The City Council meeting will be through remote participation. City staff has been working hard to accommodate for this option so please be patient if we encounter any hiccups during the meeting. Staff will be working on enhancing remote options for the next meeting. The meeting will start at promptly at 7:00 p.m. so please be sure to allow yourself enough time to get logged in so you do not miss important information

To join the meeting by computer, tablet or smartphone.

Https://Global.gotomeeting.com/Join/874745301

You can also dial in using your phone.
(For supported devices, tap a one-touch number below to join instantly.)

United States (Toll Free): 1 866 899 4679
- One-touch: Tel:+18668994679,,874745301#

United States: +1 (224) 501-3318
- One-touch: Tel:+12245013318,,874745301#

Access Code: 874-745-301

Get the app now and be ready when your first meeting
starts: Https://Global.gotomeeting.com/Install/874745301

If this is the first time you are using GoToMeeting, get the app now and be ready when your first meeting
starts:Https://Global.gotomeeting.com/Install/874745301

Please read the entirety of the procedures listed below for your use.

When you call in, the moderator will get on the line and provide any additional instructions to all those that have called in. The sound on your TV or computer MUST be muted.

There is a 15-20 second delay from the Gotomeeting (phone call). If you ask a question of a presenter please wait 15-20 seconds for the response.

Your call will be muted until the Mayor calls on you to speak; at that time your call will be unmuted.

All council members will be called on for discussion.

Remote Participation:

Options for Remote Participation

1. **By Telephone**: Members of the public who wish to provide public comment on any item must call. To participate, dial the following phone number: **1 866-899-4679 or 1 224-501-3318**, then there will be a prompt to enter the **Access Code 874-745-301**

During that time, the moderator of the call will ask your name. Once that information has been provided, your line will be muted. When it is time to speak during the meeting, the moderator will unmute the line, state the person's name who will be speaking.

2. By **Electronic Mail**: Members of the public may also provide public comment or comment on a specific item by sending an email to Mpena@Fortluptonco.gov. The email must be received by 5:00 p.m. Tuesday, April 7, 2020. The City Clerk will read the email to the City Council.

3. **In Person**: To promote social distancing, only one member of the public will be permitted to enter the council chambers at a time to provide public comment. There will be seating spread six feet apart throughout the lobby while waiting for the opportunity to speak.

Check Report

City of Fort Lupton

By Check Number

Date Range: 03/18/2020 - 04/06/2020

Vendor Number / Payable #	Vendor Name / Payable Type	Post Date	Payment Date / Payable Description	Payment Type	Discount Amount / Discount Amount	Payment Amount / Payable Amount	Number
Bank Code: Golf Course-Golf Course							
000024	ACE HARDWARE OF FORT LUPTON		03/24/2020	Regular	0.00	5.95	83624
031720	Credit Memo	03/24/2020	GOLF-CREDIT PER ACCOUNT		0.00	-18.02	
81734	Invoice	03/24/2020	GOLF-SPRAYMASTER-PRO SHOP		0.00	23.97	
000163	BRIDGESTONE GOLF, INC		03/24/2020	Regular	0.00	794.88	83625
1002884231	Invoice	03/24/2020	GOLF-2020 TOUR WHITE DZ-PRO SHOP		0.00	794.88	
000239	CITY OF FORT LUPTON		03/24/2020	Regular	0.00	58,924.31	83626
INV00662	Invoice	03/24/2020	GOLF-1/25-2/7 PAYROLL PD ON 2/14		0.00	20,585.45	
INV00664	Invoice	03/24/2020	GOLF-COMCAST INV 96204404 FOR 2/15-3/...		0.00	258.61	
INV00666	Invoice	03/24/2020	GOLF-ONE AMERICA MAR2020		0.00	152.23	
INV00669	Invoice	03/24/2020	GOLF-VERIZON INV9847183424 FOR 1/27-2/...		0.00	224.83	
INV00671	Invoice	03/24/2020	GOLF-VERIZON INV 9849255935 FOR 2/27-3...		0.00	224.83	
INV00673	Invoice	03/24/2020	GOLF-2/8-2/21 PAYROLL PD ON 2/28/2020		0.00	17,715.83	
INV00675	Invoice	03/24/2020	GOLF-2/22-3/06 PAYROLL PD ON 3/13/2020		0.00	17,987.61	
INV00677	Invoice	02/29/2020	Golf ComData Purchases		0.00	1,774.92	
000307	COMCAST CABLE COMM, LLC		03/24/2020	Regular	0.00	245.95	83627
6460120790 MAR...	Invoice	03/24/2020	GOLF-INTERNET/PHONE-PRO SHOP		0.00	245.95	
000567	HIGH COUNTRY BEVERAGE CORP		03/24/2020	Regular	0.00	1,138.10	83628
W-3153106	Invoice	03/24/2020	GOLF-BEVERAGES-PRO SHOP		0.00	545.30	
W-38648422	Invoice	03/24/2020	GOLF-BEVERAGES-PRO SHOP		0.00	592.80	
000865	OFFICE DEPOT		03/24/2020	Regular	0.00	88.90	83629
447317321001	Invoice	03/24/2020	GOLF-OFFICE SUPPLIES-PRO SHOP		0.00	88.90	
001137	UNITED POWER		03/24/2020	Regular	0.00	742.29	83630
1194602 MAR20	Invoice	03/24/2020	United Power		0.00	419.36	
1195001 MAR20	Invoice	03/24/2020	United Power		0.00	277.69	
19595600 MAR20	Invoice	03/24/2020	United Power		0.00	24.64	
6601202 MAR20	Invoice	03/24/2020	United Power		0.00	20.60	
001301	AAA AUTO PARTS INC		03/30/2020	Regular	0.00	584.11	83631
81124	Invoice	03/30/2020	GOLF-HYD OIL-MAINT		0.00	584.11	
000024	ACE HARDWARE OF FORT LUPTON		03/30/2020	Regular	0.00	151.15	83632
81566	Invoice	03/30/2020	GOLF-FASTENERS-MAINT		0.00	44.20	
81735	Invoice	03/30/2020	GOLF-HOME/GARDEN SPRAY,SPRAYER PAIL...		0.00	56.97	
81751	Credit Memo	03/30/2020	GOLF-HOME/GARDEN SPRAY-MAINT		0.00	-12.99	
81753	Invoice	03/30/2020	GOLF-MARKER MAGNUM-MAINT		0.00	9.98	
81808	Invoice	03/30/2020	GOLF-SPRAY PAINT-MAINT		0.00	21.00	
81906	Invoice	03/30/2020	GOLF-CAT LITTER-MAINT		0.00	31.99	
000073	AMERICAN EAGLE DISTRIBUTING CO		03/30/2020	Regular	0.00	162.40	83633
478729	Credit Memo	02/05/2020	GOLF-RETURNS-PRO SHOP		0.00	-157.55	
510759	Invoice	03/30/2020	GOLF-BEVERAGES-PRO SHOP		0.00	319.95	
000862	O'REILLY AUTO PARTS		03/30/2020	Regular	0.00	59.17	83634
4489-190052	Invoice	03/30/2020	GOLF-OIL AND FILTER-MAINT		0.00	44.18	
4489-193657	Invoice	03/30/2020	GOLF-RIVETER SET-MAINT		0.00	14.99	
001052	SWIRE COCA-COLA, USA		03/30/2020	Regular	0.00	365.38	83635
13923207114	Invoice	03/30/2020	GOLF-BEVERAGES-PRO SHOP		0.00	365.38	
000206	CENTURYLINK		04/06/2020	Regular	0.00	52.15	83636

Vendor Number / Payable #	Vendor Name / Payable Type	Post Date	Payment Date / Payable Description	Payment Type	Discount Amount / Discount Amount	Payment Amount / Payable Amount	Number
3945 MAR20	Invoice	04/06/2020	GOLF-3945 MAR20 TELEPHONE-MAINT		0.00	52.15	
000735	LL JOHNSON DISTRIBUTING		04/06/2020	Regular	0.00	872.99	83637
1824979-00	Invoice	04/06/2020	GOLF-TINE CROSS-MAINT		0.00	872.99	
001105	TOSHIBA FINANCIAL SERVICES		04/06/2020	Regular	0.00	471.45	83638
409738804	Invoice	04/06/2020	GOLF-COPIER LEASE-PRO SHOP		0.00	471.45	
000285	COLORADO DEPARTMENT OF REVENUE		03/19/2020	Bank Draft	0.00	186.72	DFT0001205
031920G	Invoice	03/19/2020	GOLF-FEBRUARY SALES TAX		0.00	186.72	

Bank Code Golf Course Summary

Payment Type	Payable Count	Payment Count	Discount	Payment
Regular Checks	34	15	0.00	64,659.18
Manual Checks	0	0	0.00	0.00
Voided Checks	0	0	0.00	0.00
Bank Drafts	1	1	0.00	186.72
EFT's	0	0	0.00	0.00
	35	**16**	**0.00**	**64,845.90**

Vendor Number / Payable #	Vendor Name / Payable Type	Post Date	Payment Date / Payable Description	Payment Type	Discount Amount / Discount Amount	Payment Amount / Payable Amount	Number
Bank Code: Pooled Cash-Pooled Cash							
001224	XCEL ENERGY-GAS		03/18/2020	Regular	0.00	2,424.60	67044
673859249	Invoice	03/17/2020	GF-FEB2020 GAS BILL-FAC		0.00	255.78	
674906531	Invoice	03/17/2020	MAR2020 GAS BILL		0.00	2,168.82	
000024	ACE HARDWARE OF FORT LUPTON		03/24/2020	Regular	0.00	39.96	67045
65690	Invoice	03/24/2020	GF-LED LIGHTS-CITY ADM		0.00	39.96	
000025	ACKLAM INC		03/24/2020	Regular	0.00	6,259.50	67046
5168	Invoice	03/24/2020	SD- Survey Kahil/S Denver Outfall- Storm		0.00	6,259.50	
000030	ADAMS COUNTY SHERIFF		03/24/2020	Regular	0.00	400.00	67047
321895	Invoice	03/24/2020	GF-RANGE TRAINING-PD		0.00	400.00	
000031	ADAMSON POLICE PRODUCTS		03/24/2020	Regular	0.00	1,189.00	67048
INV322412	Invoice	03/24/2020	GF-BOOTS CURAMENG-OFFICE SUPPLIES-PD		0.00	150.00	
INV322617	Invoice	03/24/2020	GF-UNIFORM SHIRTS HEMPEL-PD		0.00	48.00	
INV322741	Invoice	03/24/2020	GF-VEST ASSAY/BOTHELL-PD		0.00	991.00	
000034	ADT SECURITY SYSTEM		03/24/2020	Regular	0.00	112.29	67049
030220	Invoice	03/24/2020	SECURITY MONITORING		0.00	112.29	
000037	ADVANCED URGENT CARE AND OCC MED		03/24/2020	Regular	0.00	410.00	67050
54640	Invoice	03/24/2020	GF-HEP B VACCINE HART-PD		0.00	105.00	
54642	Invoice	03/24/2020	GF-PRE EMPLOYMENT EXAM RENTERIA-HR		0.00	125.00	
54643	Invoice	03/24/2020	GF-PRE EMPLOYMENT TESTING VASQUEZ-HR		0.00	180.00	
000040	AFLAC		03/24/2020	Regular	0.00	2,942.04	67051
908534	Invoice	03/24/2020	GF-SUPP INS FOR MAR-HR		0.00	2,942.04	
001947	AMERICAN UNITED LIFE INSURANCE COMPANY		03/24/2020	Regular	0.00	5,050.84	67052
G 00617833 APR20	Invoice	04/01/2020	LI, AD&D, LTD, STD Ins Prem		0.00	5,050.84	
000082	AMERICAN WEST LAND SURVEYING, INC		03/24/2020	Regular	0.00	2,000.00	67053
20-111	Invoice	03/24/2020	Survey for Vigil ReSubdivision		0.00	2,000.00	
000136	BG'S JAPANESE DESIGNS		03/24/2020	Regular	0.00	44.00	67055
6175	Invoice	03/24/2020	GF-SHIELD/NAME ON SHIRTS-PD		0.00	44.00	
000216	CHAMBER OF COMMERCE		03/24/2020	Regular	0.00	48.00	67056
4937	Invoice	03/24/2020	GF-MARCH 2020 MEETINGS		0.00	48.00	
002023	CITY OF GREELEY POLICE DEPARTMENT		03/24/2020	Regular	0.00	7,743.29	67057
1P000839	Invoice	03/24/2020	Guard Agreement with Greeley PD		0.00	7,743.29	
000281	COLORADO DEPARTMENT OF AGRICULTURE		03/24/2020	Regular	0.00	120.00	67058
3928	Invoice	03/24/2020	GF-LASER SPEED UNITS, RADAR TUNING FO...		0.00	120.00	
001295	COMMERCIAL FITNESS SOLUTIONS INC		03/24/2020	Regular	0.00	35,217.44	67059
7623	Invoice	03/24/2020	RC- Weight Room Equipment- Rec		0.00	26,646.44	
7682	Invoice	03/24/2020	TRX		0.00	7,971.00	
7709	Invoice	03/24/2020	REC-FLOOR SCAN FOR TRX		0.00	600.00	
000372	DELL MARKETING LP		03/24/2020	Regular	0.00	728.86	67060
10378627711	Invoice	03/24/2020	Dell - Fiber Cards for Servers		0.00	728.86	
002094	DOOLEY ENTERPRISES INC		03/24/2020	Regular	0.00	1,813.54	67061
57516	Invoice	03/24/2020	Ammunition Purchase - FlyingHawk Academy		0.00	1,813.54	
000410	E-470 PUBLIC HIGHWAY AUTHORITY		03/24/2020	Regular	0.00	42.85	67062
2054640678	Invoice	03/24/2020	GF-EXPRESS TOLL FEES-PD		0.00	42.85	
000429	EMPIRE PORTABLE RESTROOMS		03/24/2020	Regular	0.00	1,090.00	67063
48441	Invoice	03/24/2020	GF-PORTABLE RESTROOM SERVICES 03/03-0...		0.00	515.00	
48554	Invoice	03/24/2020	GF-PORTABLE RESTROOM SERVICE 03/03-03...		0.00	575.00	

Vendor Number / Payable #	Vendor Name / Payable Type	Post Date	Payment Date / Payable Description	Payment Type	Discount Amount / Discount Amount	Payment Amount / Payable Amount	Number
000431	EMPLOYERS COUNCIL SERVICES, INC		03/24/2020	Regular	0.00	6,000.00	67064
337892	Invoice	03/24/2020	GF-MEMBERSHIP DUES-HR		0.00	6,000.00	
000508	FULTON IRRIGATING DITCH		03/24/2020	Regular	0.00	12,090.40	67065
030220	Invoice	03/24/2020	UF- 2020 Fulton Ditch Assessment- Water		0.00	12,090.40	
000551	H&J CARPET CLEANING		03/24/2020	Regular	0.00	350.00	67066
3401	Invoice	03/24/2020	REC-CARPET CLEANING		0.00	350.00	
001930	HUMANA HEALTH PLAN INC		03/24/2020	Regular	0.00	84,459.30	67067
379450709	Invoice	03/24/2020	GF-HEALTH, DENTAL, VISION EAP		0.00	84,459.30	
000588	ID EDGE INC		03/24/2020	Regular	0.00	274.75	67068
90322	Invoice	03/24/2020	REC-PRINTER RIBBON/CLEANING KIT		0.00	274.75	
001786	JOHNSON CONTROLS SECURITY SOLUTIONS		03/24/2020	Regular	0.00	163.86	67069
34013981	Invoice	03/24/2020	CPR-SECURITY MONITORING-MUSEUM		0.00	163.86	
000691	KONE INC		03/24/2020	Regular	0.00	140.80	67070
959500050	Invoice	03/24/2020	REC-MAINTENANCE/ELEVATOR		0.00	140.80	
002194	METROWEST NEWSPAPERS		03/24/2020	Regular	0.00	384.12	67071
202002 FEB20	Invoice	03/24/2020	GF-PUBLIC NOTICES		0.00	384.12	
002027	MURRAYSMITH INC		03/24/2020	Regular	0.00	2,037.13	67072
20-2746.00-2	Invoice	03/24/2020	WST- Non-Pot Pumphouse Engineering- WTP		0.00	2,037.13	
000835	NEOGOV		03/24/2020	Regular	0.00	250.00	67073
INV-13198	Invoice	03/24/2020	GF-SUBSCRIPTION FEE-HR		0.00	250.00	
000857	NORTHERN WATER		03/24/2020	Regular	0.00	207,073.48	67074
2020WATER	Invoice	03/24/2020	UF- 2020 Windy Gap Assessment- Water		0.00	207,073.48	
001567	PROFORCE LAW ENFORCEMENT		03/24/2020	Regular	0.00	1,443.00	67075
402236	Invoice	03/24/2020	Firearms Replacement Purchase		0.00	1,443.00	
002265	QUADIENT FINANCE USA INC		03/24/2020	Regular	0.00	356.00	67076
11623355	Invoice	03/24/2020	POSTAGE CHARGES		0.00	356.00	
001066	TEAMVIEWER GMBH		03/24/2020	Regular	0.00	1,446.00	67077
2105841207	Invoice	03/24/2020	Teamviewer		0.00	1,446.00	
001070	TERRIE L. ASAY		03/24/2020	Regular	0.00	140.30	67078
031020	Invoice	03/24/2020	GF-GENERAL SUPPLIES-PD		0.00	117.30	
0316	Invoice	03/24/2020	GF-TRAVEL/MEETINGS-PD		0.00	23.00	
001075	THE CONSOLIDATED MUTUAL		03/24/2020	Regular	0.00	180.25	67079
031820	Invoice	03/24/2020	UF-FEB20 ELECTRICAL PERRY PTI WELL C-W ...		0.00	33.98	
031820B	Invoice	03/24/2020	UF-FEB20 ELECTRICAL PERRY PIT WELL B-W ...		0.00	35.16	
031820PUMP	Invoice	03/24/2020	UF-FEB20 ELECTRICAL PERRY PIT DISCHARGE...		0.00	111.11	
001635	THE TALLENT COMPANY		03/24/2020	Regular	0.00	2,750.00	67080
1047	Invoice	03/31/2020	GF-COMMUNICATION SERVICES-CITY ADM		0.00	2,750.00	
001101	TODD HODGES DESIGN LLC		03/24/2020	Regular	0.00	10,027.50	67081
3194	Invoice	03/24/2020	GF-PLANNING SERVICES 03/02-03/15		0.00	10,027.50	
001105	TOSHIBA FINANCIAL SERVICES		03/24/2020	Regular	0.00	1,137.15	67082
409118486	Invoice	03/06/2020	Copier Lease		0.00	1,137.15	
001126	TYLER TECHNOLOGIES		03/24/2020	Regular	0.00	273.19	67083
130-12596	Invoice	03/24/2020	Brazos Maintenance		0.00	273.19	
001138	UNITED POWER		03/24/2020	Regular	0.00	900.00	67084
104158	Invoice	03/24/2020	United Power Plant Investment Fee		0.00	900.00	
001137	UNITED POWER		03/24/2020	Regular	0.00	4,706.67	67085

Vendor Number / Payable #	Vendor Name / Payable Type	Post Date	Payment Date / Payable Description	Payment Type	Discount Amount / Discount Amount	Payment Amount / Payable Amount	Number
10553102 MAR20	Invoice	03/24/2020	United Power		0.00	22.11	
15232500 MAR20	Invoice	03/24/2020	United Power		0.00	21.38	
17149700 MAR20	Invoice	03/24/2020	United Power		0.00	62.19	
17868800 MAR20	Invoice	03/24/2020	United Power		0.00	20.00	
18498400 MAR20	Invoice	03/24/2020	United Power		0.00	471.66	
726705 MAR20	Invoice	03/24/2020	United Power		0.00	22.76	
7280200 MAR20	Invoice	03/24/2020	United Power		0.00	21.79	
803908 MAR20	Invoice	03/24/2020	United Power		0.00	4,064.78	
001183	WAXIE SANITARY SUPPLY		03/24/2020	Regular	0.00	1,707.96	67086
78817872	Invoice	03/24/2020	REC-JANITORIAL SUPPLIES		0.00	545.25	
78830914	Invoice	03/24/2020	GF-TRASH BAGS-PARKS		0.00	37.78	
78843544	Invoice	03/24/2020	REC-GYM WIPES		0.00	104.15	
78843546	Invoice	03/24/2020	GF-JANITORIAL SUPPLIES-FAC		0.00	259.24	
78846251	Invoice	03/24/2020	REC-GYM WIPES		0.00	416.60	
78866382	Invoice	03/24/2020	REC-ACID 93		0.00	281.40	
78964114	Invoice	03/24/2020	GF-TOILET PAPER-FAC		0.00	63.54	
001199	WELD COUNTY PUBLIC SAFETY IT		03/24/2020	Regular	0.00	146.50	67087
FLPD-03032020-R...	Invoice	03/24/2020	GF-TOKEN UPDATES-PD		0.00	146.50	
001301	AAA AUTO PARTS INC		03/30/2020	Regular	0.00	13.98	67088
82207	Invoice	03/30/2020	GF-POWER CAP-PARKS		0.00	13.98	
000024	ACE HARDWARE OF FORT LUPTON		03/30/2020	Regular	0.00	5.00	67089
70712	Invoice	03/30/2020	GF-HARDWARE-PD		0.00	5.00	
000027	ACTIVE NETWORK		03/30/2020	Regular	0.00	920.00	67090
11115966	Invoice	03/30/2020	REC-(2) CREDIT CARD READERS FOR FRONT ...		0.00	920.00	
001456	ANNA VIGIL		03/30/2020	Regular	0.00	270.00	67092
2006110.001	Invoice	03/30/2020	REC-BABY SHOWER LINENS REFUND		0.00	270.00	
002273	ARMANDO ORTEGA-QUIROZ		03/30/2020	Regular	0.00	396.00	67093
2006084.001	Invoice	03/30/2020	REC-ROOM RENTAL REFUND		0.00	396.00	
001988	CHARLES P MILLER		03/30/2020	Regular	0.00	160.00	67096
2006085.001	Invoice	03/30/2020	REC-ROOM RENTAL REFUND		0.00	160.00	
002269	CIGANY GUADALUPE CASTILLO		03/30/2020	Regular	0.00	20.00	67097
2006090.001	Invoice	03/30/2020	REC-BOOT CAMP REFUND		0.00	20.00	
000233	CIRSA/PC		03/30/2020	Regular	0.00	2,094.94	67098
192159	Invoice	03/30/2020	GF-PC6010315 DEDUCTIBLE-STREETS		0.00	1,000.00	
192215	Invoice	03/30/2020	GF-PC ADDITIONS OF PD VEHICLES-PD		0.00	94.94	
200570	Invoice	03/30/2020	GF-PC6010790-1 DEDUCTIBLE		0.00	1,000.00	
000268	COLORADO ANALYTICAL LAB		03/30/2020	Regular	0.00	230.00	67099
191206005	Invoice	03/30/2020	UF-TOTAL COLIFORM 12-9-19 - W LINES		0.00	46.00	
191219035	Invoice	03/30/2020	UF-TOTAL COLIFORM 12-23-19 - W LINES		0.00	46.00	
191220050	Invoice	03/30/2020	UF-TOTAL COLIFORM 12-23-19 - W LINES		0.00	46.00	
191220052	Invoice	03/30/2020	UF-TOTAL COLIFORM-W LINES		0.00	46.00	
200313052	Invoice	03/30/2020	UF-TOTAL COLIFORM - W LINES		0.00	46.00	
000307	COMCAST CABLE COMM, LLC		03/30/2020	Regular	0.00	231.38	67100
164533 MAR20	Invoice	03/30/2020	GF-3/23-4/22 INTERNET SERV-PW SHOP		0.00	231.38	
002276	DEBIE LYNN DUTCHER		03/30/2020	Regular	0.00	100.00	67101
2006101.001	Invoice	03/30/2020	REC-POOL PARTY REFUND		0.00	100.00	
000491	FORT LUPTON VETERINARY		03/30/2020	Regular	0.00	660.00	67102
766956	Invoice	03/30/2020	GF-FEB2020 BOARDING SERVICES-COM SVCS		0.00	660.00	
002281	HILDA REYES DIAZ		03/30/2020	Regular	0.00	495.00	67103

Vendor Number / Payable #	Vendor Name / Payable Type	Post Date	Payment Date / Payable Description	Payment Type	Discount Amount / Discount Amount	Payment Amount / Payable Amount	Number
2006109.001	Invoice	03/30/2020	REC-ROOM RENTAL FEE REFUND		0.00	495.00	
002280	JANICE KOSHIO		03/30/2020	Regular	0.00	120.00	67104
2006108.001	Invoice	03/30/2020	REC-ROOM RENTAL REFUND		0.00	120.00	
002270	JASON CLARK		03/30/2020	Regular	0.00	20.00	67105
2006091.001	Invoice	03/30/2020	REC-BOOT CAMP REFUND		0.00	20.00	
002279	JULIE LIPTAK		03/30/2020	Regular	0.00	100.00	67106
2006105.001	Invoice	03/30/2020	REC-ROOM RENTAL REFUND		0.00	100.00	
000709	LAURA FUNK		03/30/2020	Regular	0.00	100.00	67107
2006111.001	Invoice	03/30/2020	REC-POOL PARTY REFUND		0.00	100.00	
002246	LORIE KRUMTUM		03/30/2020	Regular	0.00	505.00	67108
2006081.001	Invoice	03/30/2020	REC-ROOM RENTAL REFUND		0.00	505.00	
000745	LOUIS A GRESH		03/30/2020	Regular	0.00	1,500.00	67109
MARCH20	Invoice	03/30/2020	GF-ARRAIGNMENTS MARCH 2020-COURT		0.00	1,500.00	
002271	MICHELLE GEORGE		03/30/2020	Regular	0.00	100.00	67110
2006086.001	Invoice	03/30/2020	REC-POOL PARTY REFUND		0.00	100.00	
002275	NICOLE THURTELL		03/30/2020	Regular	0.00	70.00	67111
2006087.001	Invoice	03/30/2020	REC-ROOM RENTAL REFUND		0.00	70.00	
000861	NVAA		03/30/2020	Regular	0.00	113.00	67112
031920	Invoice	03/30/2020	REC-SPRING SOCCER/VOLLEYBALL DUES		0.00	113.00	
000865	OFFICE DEPOT		03/30/2020	Regular	0.00	65.62	67113
453436164001	Invoice	03/30/2020	GF-LYSOL, LEGAL MANILA JKT-ADMIN		0.00	49.25	
453436760001	Invoice	03/30/2020	GF-MANILA FOLDER-ADMIN		0.00	16.37	
001943	PINNACOL ASSURANCE		03/30/2020	Regular	0.00	10,548.92	67114
19949424	Invoice	03/30/2020	2020 WORKERS COMP PREMIUM		0.00	10,548.92	
000901	PLAINS EAST MECHANICAL SERVICES LLC		03/30/2020	Regular	0.00	1,665.50	67115
2826-1074	Invoice	03/30/2020	CPR-HVAC REPAIR-COMM CTR		0.00	170.00	
2827-1075	Invoice	03/30/2020	REC-POOL HVAC REPAIR		0.00	1,495.50	
002267	RANDY REEVES		03/30/2020	Regular	0.00	50.00	67116
2006107.001	Invoice	03/30/2020	REC-MONTHLY MEMBERSHIP REFUND		0.00	50.00	
001040	STERICYCLE		03/30/2020	Regular	0.00	60.86	67117
3005039858	Invoice	03/30/2020	REC-BIOHAZARD PICKUP		0.00	60.86	
001606	SUPER-TECH FILTERS		03/30/2020	Regular	0.00	563.71	67118
326535	Invoice	03/30/2020	AIR FILTERS		0.00	563.71	
001126	TYLER TECHNOLOGIES		03/30/2020	Regular	0.00	2,945.00	67119
25-286171	Invoice	03/30/2020	Incode Court Maint_OnlineSetup		0.00	2,000.00	
25-290391	Invoice	04/01/2020	Tyler Technologies - Basic Network Support		0.00	945.00	
001137	UNITED POWER		03/30/2020	Regular	0.00	339.91	67120
1196401 MAR20	Invoice	03/30/2020	United Power		0.00	33.82	
1279801 MAR20	Invoice	03/30/2020	United Power		0.00	24.72	
14427100 MAR20	Invoice	03/30/2020	United Power		0.00	188.17	
17761600 MAR20	Invoice	03/30/2020	United Power		0.00	20.00	
3399301 MAR20	Invoice	03/30/2020	GF-02/20-03/19 MAR20 ELECTRIC BILL-STRE...		0.00	52.13	
6612303 MAR20	Invoice	03/30/2020	GF-2/20-3/19 ELECTRIC GOLF ENTRANCE SI...		0.00	21.07	
002268	VIANEY CARREON-SALUD		03/30/2020	Regular	0.00	20.00	67121
2006089.001	Invoice	03/30/2020	REC-BOOT CAMP REFUND		0.00	20.00	
001963	WASTE CONNECTIONS OF COLO, INC		03/30/2020	Regular	0.00	383.09	67122
4166568	Invoice	03/30/2020	GF-PARKS SHOP TRASH PU-PARKS		0.00	102.55	

Vendor Number / Payable #	Vendor Name / Payable Type	Post Date	Payment Date / Payable Description	Payment Type	Discount Amount / Discount Amount	Payment Amount / Payable Amount	Number
4167191	Invoice	03/30/2020	CEM-3YD TRASH PICKUP		0.00	280.54	
001183	WAXIE SANITARY SUPPLY		03/30/2020	Regular	0.00	1,936.00	67123
78968391	Invoice	03/30/2020	REC-GYM WIPES		0.00	479.64	
78968395	Invoice	03/30/2020	CPR-PAPER TOWELS, SOAP-COMM CTR		0.00	337.90	
78978276	Invoice	03/30/2020	GF-HAND SANITIZER-FAC		0.00	235.36	
78978277	Invoice	03/30/2020	GF-TRASH LINERS-PARKS		0.00	565.90	
78978278	Invoice	03/30/2020	REC-PURELL WIPES		0.00	317.20	
002274	WILLIAM RATLIFF		03/30/2020	Regular	0.00	100.00	67124
2006083.001	Invoice	03/30/2020	REC-ROOM RENTAL REFUND		0.00	100.00	
001224	XCEL ENERGY-GAS		03/30/2020	Regular	0.00	182.30	67125
677765468	Invoice	03/30/2020	GF-MAR20 GAS BILL-FAC		0.00	182.30	
001916	MARIA SAILAS		03/30/2020	Regular	0.00	276.30	67126
73524	Invoice	03/30/2020	GF-PAYROLL REISSUED 73524 SAILAS		0.00	276.30	
000031	ADAMSON POLICE PRODUCTS		04/06/2020	Regular	0.00	60.50	67127
INV323054	Invoice	04/06/2020	GF-BIANCHI BELT, NAME PLATE TURNEY-PD		0.00	60.50	
000136	BG'S JAPANESE DESIGNS		04/06/2020	Regular	0.00	336.70	67144
6176	Invoice	04/06/2020	GF-EMBROIDERY SERVICES HEMPEL-PD		0.00	84.00	
6177	Invoice	04/06/2020	GF-EMROIDERY SERVICES SALINAS/VASQUEZ...		0.00	180.00	
6178	Invoice	04/06/2020	GF-EMBRODERY SERVICES-PD		0.00	72.70	
000204	CENTERPOINT ENERGY SERVICES INC		04/06/2020	Regular	0.00	2,406.80	67156
4086684	Invoice	04/06/2020	REC-NATURAL GAS DELIVERIES		0.00	2,406.80	
000216	CHAMBER OF COMMERCE		04/06/2020	Regular	0.00	620.00	67158
FEB2020	Invoice	04/06/2020	GF-2020 CHAMBER MEMBERSHIP/LUNCHES		0.00	620.00	
000247	CLIFTONLARSONALLEN LLP		04/06/2020	Regular	0.00	190.48	67162
2427844	Invoice	04/06/2020	GF-HRA & 1042S CONSULTATION-FIN		0.00	190.48	
000306	COMCAST BUSINESS		04/06/2020	Regular	0.00	2,832.11	67163
97855666	Invoice	03/15/2020	Comcast Phones		0.00	2,832.11	
000307	COMCAST CABLE COMM, LLC		04/06/2020	Regular	0.00	366.96	67164
117309 MAR20	Invoice	04/06/2020	REC-CABLE MUSIC/INTERNET		0.00	268.05	
159244 MAR20	Invoice	04/06/2020	GF-MAR20 FAX/INTOXILIZER-PD		0.00	98.91	
000467	FIRST CLASS SECURITY SYSTEMS LLC		04/06/2020	Regular	0.00	332.50	67177
119186	Invoice	04/06/2020	CPR-VIDEO SYSTEM SERVICE-COMM CTR		0.00	332.50	
001266	GOVCONNECTION INC		04/06/2020	Regular	0.00	3,673.20	67181
57600275	Invoice	04/06/2020	Webroot 3yr Renewal		0.00	3,673.20	
001805	JACOB EALY		04/06/2020	Regular	0.00	29.00	67189
2006221.001	Invoice	04/06/2020	REC CENTER REFUNDS		0.00	29.00	
002166	JBS PIPELINE CONTRACTORS		04/06/2020	Regular	0.00	133,718.43	67194
JBS0213 3	Invoice	04/06/2020	WST- Irrigation Line Mustang- Water		0.00	28,645.65	
JBS0213 3B	Invoice	04/06/2020	UF- 2019 Sanitary & Water Lines Change Or...		0.00	66,817.44	
JBS0213 3C	Invoice	04/06/2020	Uf-Sanitary & Water Replacement Project		0.00	38,255.34	
000657	JOHN ELWAY CHEVROLET		04/06/2020	Regular	0.00	114,303.00	67202
13554	Invoice	04/06/2020	GF- 3 Chevrolet Tahoes- PD		0.00	38,101.00	
13555	Invoice	04/06/2020	GF- 3 Chevrolet Tahoes- PD		0.00	38,101.00	
13556	Invoice	04/06/2020	GF- 3 Chevrolet Tahoes- PD		0.00	38,101.00	
000783	MEANDERING WITH MARY		04/06/2020	Regular	0.00	60.00	67228
0323	Invoice	04/06/2020	CPR-MARCH CASINO TRIP-SENIORS		0.00	60.00	
002243	NOCO MUNICIPAL CONSULTING LLC		04/06/2020	Regular	0.00	350.00	67236

Vendor Number / Payable #	Vendor Name / Payable Type	Post Date	Payment Date / Payable Description	Payment Type	Discount Amount / Discount Amount	Payment Amount / Payable Amount	Number
2	Invoice	04/06/2020	GF- New City Hall Feasibility Study- Misc		0.00	350.00	
000865	OFFICE DEPOT		04/06/2020	Regular	0.00	162.23	67240
457134995001	Invoice	04/06/2020	GF-DISINFECTING SUPPLIES-ADMIN		0.00	20.04	
457143613001	Invoice	04/06/2020	GF-DISINFECTANT SPRAY-ADMIN		0.00	142.19	
000862	O'REILLY AUTO PARTS		04/06/2020	Regular	0.00	8.97	67241
4489-196140	Invoice	04/06/2020	GF-NOVELTY ITEMS-PARKS		0.00	8.97	
001624	STATE OF COLORADO		04/06/2020	Regular	0.00	3,737.57	67259
25176-20	Invoice	04/06/2020	UF-MARCH 2020 BILLINGSVCS-UB		0.00	3,737.57	
001101	TODD HODGES DESIGN LLC		04/06/2020	Regular	0.00	9,543.75	67270
3195	Invoice	04/06/2020	GF-PLANNING SERVICES 3/16-3/29-PLAN		0.00	9,543.75	
001105	TOSHIBA FINANCIAL SERVICES		04/06/2020	Regular	0.00	260.45	67272
409737319	Invoice	04/06/2020	GF-BASEMENT COPIER MONTHLY LEASE-IT		0.00	260.45	
001137	UNITED POWER		04/06/2020	Regular	0.00	28,654.17	67273
1195501 MAR20	Invoice	04/06/2020	United Power		0.00	1,660.68	
1207701 MAR20	Invoice	04/06/2020	United Power		0.00	21.05	
1223101 MAR20	Invoice	04/06/2020	United Power		0.00	20.00	
1240301 MAR20	Invoice	04/06/2020	United Power		0.00	271.81	
1241801 MAR20	Invoice	04/06/2020	United Power		0.00	66.54	
1241903 MAR20	Invoice	04/06/2020	United Power		0.00	50.27	
1276101 MAR20	Invoice	04/06/2020	United Power		0.00	387.43	
1295501 MAR20	Invoice	04/06/2020	United Power		0.00	75.00	
1296101 MAR20	Invoice	04/06/2020	United Power		0.00	545.65	
1299501 MAR20	Invoice	04/06/2020	United Power		0.00	112.00	
1302801 MAR20	Invoice	04/06/2020	United Power		0.00	1,458.48	
1302901 MAR20	Invoice	04/06/2020	United Power		0.00	156.77	
1316801 MAR20	Invoice	04/06/2020	United Power		0.00	512.84	
1322501 MAR20	Invoice	04/06/2020	United Power		0.00	6,196.89	
1360303 MAR20	Invoice	04/06/2020	United Power		0.00	44.36	
13842400 MAR20	Invoice	04/06/2020	United Power		0.00	46.20	
18057500 MAR20	Invoice	04/06/2020	United Power		0.00	531.08	
18762100 MAR20	Invoice	04/06/2020	United Power		0.00	91.25	
19545100 MAR20	Invoice	04/06/2020	United Power		0.00	763.74	
20040100 MAR20	Invoice	04/06/2020	United Power		0.00	382.54	
6779701 MAR20	Invoice	04/06/2020	United Power		0.00	5,934.96	
704901 MAR20	Invoice	04/06/2020	United Power		0.00	7,670.66	
7225800 MAR20	Invoice	04/06/2020	United Power		0.00	21.83	
733101 MAR20	Invoice	04/06/2020	United Power		0.00	337.36	
762901 MAR20	Invoice	04/06/2020	United Power		0.00	589.57	
8976200 MAR20	Invoice	04/06/2020	United Power		0.00	705.21	
001183	WAXIE SANITARY SUPPLY		04/06/2020	Regular	0.00	58.84	67278
79008910	Invoice	04/06/2020	REC-HAND SANITIZER		0.00	58.84	
000119	BANK OF COLORADO		03/27/2020	Bank Draft	0.00	4,917.77	DFT0001195
INV0000733	Invoice	03/27/2020	HSA DISTRIBUTION		0.00	4,917.77	
000119	BANK OF COLORADO		03/27/2020	Bank Draft	0.00	691.27	DFT0001196
INV0000734	Invoice	03/27/2020	HSA DISTRIBUTION		0.00	691.27	
001416	VALIC_1		03/27/2020	Bank Draft	0.00	28,567.80	DFT0001197
INV0000735	Invoice	03/27/2020	VALIC - 457(b) $ Contributions		0.00	28,567.80	
001265	IRS		03/27/2020	Bank Draft	0.00	46,074.15	DFT0001198
INV0000736	Invoice	03/27/2020	Federal Withholding		0.00	46,074.15	
001418	CO DEPARTMENT OF REVENUE		03/27/2020	Bank Draft	0.00	7,227.37	DFT0001199
INV0000737	Invoice	03/27/2020	CO Withholding		0.00	7,227.37	

Vendor Number / Payable #	Vendor Name / Payable Type	Post Date	Payment Date / Payable Description	Payment Type	Discount Amount / Discount Amount	Payment Amount / Payable Amount	Number
000285	COLORADO DEPARTMENT OF REVENUE		03/19/2020	Bank Draft	0.00	13.41	DFT0001200
031920	Invoice	03/19/2020	REC- FEBRUARY SALES TAX		0.00	13.41	
001416	VALIC_1		03/25/2020	Bank Draft	0.00	106.24	DFT0001202
INV0000738	Invoice	03/25/2020	VALIC - Regular Plan Retirement Contributio...		0.00	106.24	
001265	IRS		03/25/2020	Bank Draft	0.00	331.06	DFT0001203
INV0000739	Invoice	03/25/2020	Federal Withholding		0.00	331.06	
001418	CO DEPARTMENT OF REVENUE		03/25/2020	Bank Draft	0.00	52.26	DFT0001204
INV0000740	Invoice	03/25/2020	CO Withholding		0.00	52.26	
000465	FIRE & POLICE PENSION ASC		03/27/2020	Bank Draft	0.00	1,611.77	DFT0001206
0327	Invoice	03/27/2020	GF-FPPA FOR 03/27 PAYROLL		0.00	1,611.77	

Bank Code Pooled Cash Summary

Payment Type	Payable Count	Payment Count	Discount	Payment
Regular Checks	176	100	0.00	735,181.74
Manual Checks	0	0	0.00	0.00
Voided Checks	0	0	0.00	0.00
Bank Drafts	10	10	0.00	89,593.10
EFT's	0	0	0.00	0.00
	186	**110**	**0.00**	**824,774.84**

All Bank Codes Check Summary

Payment Type	Payable Count	Payment Count	Discount	Payment
Regular Checks	210	115	0.00	799,840.92
Manual Checks	0	0	0.00	0.00
Voided Checks	0	0	0.00	0.00
Bank Drafts	11	11	0.00	89,779.82
EFT's	0	0	0.00	0.00
	221	**126**	**0.00**	**889,620.74**

Fund Summary

Fund	Name	Period	Amount
600	GOLF ENTERPRISE FUND	3/2020	63,449.31
600	GOLF ENTERPRISE FUND	4/2020	1,396.59
999	POOLED CASH/CONSOLIDATED CASH	3/2020	523,069.18
999	POOLED CASH/CONSOLIDATED CASH	4/2020	301,705.66
			889,620.74

Transaction Date	Merchant Name	First Name	Last Name
2/5/2020	SAFEWAY #1045	NATHALIA	BALDERAS
2/5/2020	SAFEWAY #1045	NATHALIA	BALDERAS
2/5/2020	SAFEWAY #1045	NATHALIA	BALDERAS
2/5/2020	SAFEWAY #1045	NATHALIA	BALDERAS
2/6/2020	WEATHERTECH DIRECT L	NATHALIA	BALDERAS
2/25/2020	VISTAPR*VISTAPRINT.COI	NATHALIA	BALDERAS
		Clerk/Admin	
2/10/2020	ACE HARDWARE OF FORT	MANUEL	ADAME
2/14/2020	ACE HARDWARE OF FORT	MANUEL	ADAME
2/21/2020	ACE HARDWARE OF FORT	MANUEL	ADAME
2/21/2020	ACE HARDWARE OF FORT	MANUEL	ADAME
2/25/2020	ACE HARDWARE OF FORT	MANUEL	ADAME
2/26/2020	ACE HARDWARE OF FORT	MANUEL	ADAME
2/26/2020	ACE HARDWARE OF FORT	LEONARD	ADAME
2/27/2020	EPASALES	MANUEL	ADAME
2/20/2020	ACE HARDWARE OF FORT	CRISTOBAL	ARELLANO
2/25/2020	ACE HARDWARE OF FORT	CRISTOBAL	ARELLANO
2/27/2020	SHELL OIL 57444420707	CRISTOBAL	ARELLANO
2/5/2020	ACE HARDWARE OF FORT	DEREK L	BEJARANO
2/20/2020	SHELL OIL 57444420707	DEREK L	BEJARANO
2/26/2020	ACE HARDWARE OF FORT	DEREK L	BEJARANO
1/30/2020	ACE HARDWARE OF FORT	RUBEN	FUNTES
1/30/2020	ACE HARDWARE OF FORT	RUBEN	FUNTES
2/9/2020	SBM TRAVEL SHOP	RUBEN	FUNTES
2/9/2020	SBM TRAVEL SHOP	RUBEN	FUNTES
2/12/2020	SBM TRAVEL SHOP	RUBEN	FUNTES
2/12/2020	SBM TRAVEL SHOP	RUBEN	FUNTES

2/12/2020	SBM TRAVEL SHOP	RUBEN	FUNTES
2/13/2020	SBM TRAVEL SHOP	RUBEN	FUNTES
2/13/2020	SBM TRAVEL SHOP	RUBEN	FUNTES
2/18/2020	SBM TRAVEL SHOP	RUBEN	FUNTES
2/18/2020	SBM TRAVEL SHOP	RUBEN	FUNTES
2/18/2020	SBM TRAVEL SHOP	RUBEN	FUNTES
2/4/2020	ACE HARDWARE OF FORT	ANTHONY	GOMEZ
2/5/2020	FRONT RANGE LUMBER C	ANTHONY	GOMEZ
2/13/2020	SBM TRAVEL SHOP	ANTHONY	GOMEZ
2/19/2020	SBM TRAVEL SHOP	ANTHONY	GOMEZ
2/24/2020	PAYPAL *ELMWOODEQUI	ANTHONY	GOMEZ
2/5/2020	ACE HARDWARE OF FORT	DARYL	JERNIGAN
2/5/2020	ACE HARDWARE OF FORT	DARYL	JERNIGAN
2/6/2020	ACE HARDWARE OF FORT	DARYL	JERNIGAN
2/10/2020	SBM TRAVEL SHOP	DARYL	JERNIGAN
2/14/2020	ACE HARDWARE OF FORT	DARYL	JERNIGAN
2/18/2020	ACE HARDWARE OF FORT	DARYL	JERNIGAN
2/20/2020	ACE HARDWARE OF FORT	DARYL	JERNIGAN
2/24/2020	SHELL OIL 57444420707	DARYL	JERNIGAN
2/25/2020	ACE HARDWARE OF FORT	DARYL	JERNIGAN
2/9/2020	SBM TRAVEL SHOP	JOSHUA J	MARTINEZ
2/20/2020	ACE HARDWARE OF FORT	JOSHUA J	MARTINEZ
2/18/2020	ACE HARDWARE OF FORT	CHARLES	MILLER
2/20/2020	ACE HARDWARE OF FORT	CHARLES	MILLER
2/21/2020	ACE HARDWARE OF FORT	CHARLES	MILLER
1/31/2020	ACE HARDWARE OF FORT	ANGEL	SALCIDO
1/31/2020	ACE HARDWARE OF FORT	ANGEL	SALCIDO
2/14/2020	ACE HARDWARE OF FORT	ANGEL	SALCIDO
	Public Works		
2/3/2020	AMZN MKTP US*MH71F0H	TRAVIS	AKSAMITOWSKI
2/4/2020	AMZN MKTP US*TS7R72D	TRAVIS	AKSAMITOWSKI
2/4/2020	AMZN MKTP US*S286I0HI3	TRAVIS	AKSAMITOWSKI
2/5/2020	AMAZON.COM*KT4XM78A	TRAVIS	AKSAMITOWSKI
2/5/2020	AMZN MKTP US*9S7P55JL	TRAVIS	AKSAMITOWSKI
2/6/2020	AMZN MKTP US*TC94X0R	TRAVIS	AKSAMITOWSKI
2/6/2020	AMZN MKTP US*J93AI0XY	TRAVIS	AKSAMITOWSKI
2/7/2020	AMZN MKTP US*CR3NY5S	TRAVIS	AKSAMITOWSKI
2/7/2020	AMZN MKTP US*HT9LL4C	TRAVIS	AKSAMITOWSKI
2/8/2020	AMZN MKTP US*ON7VH8M	TRAVIS	AKSAMITOWSKI

2/9/2020	AMAZON.COM*1441C21C3	TRAVIS	AKSAMITOWSKI
2/12/2020	AMZN MKTP US*YX5GO2M	TRAVIS	AKSAMITOWSKI
2/12/2020	AMZN MKTP US*4G9D42QI	TRAVIS	AKSAMITOWSKI
2/12/2020	AMZN MKTP US*7J9MC8B3	TRAVIS	AKSAMITOWSKI
2/17/2020	AMAZON.COM*TO0C08653	TRAVIS	AKSAMITOWSKI
2/19/2020	IN *COLORADO GOVERNM	TRAVIS	AKSAMITOWSKI
2/20/2020	AMZN MKTP US*ZE60Z8SF	TRAVIS	AKSAMITOWSKI
2/23/2020	AMZN MKTP US*2Y5PF7V7	TRAVIS	AKSAMITOWSKI
2/25/2020	AMZN MKTP US*ND4E75F4	TRAVIS	AKSAMITOWSKI
2/25/2020	AMZN MKTP US*ND4E75F4	TRAVIS	AKSAMITOWSKI
2/25/2020	AMZN MKTP US*ND4E75F4	TRAVIS	AKSAMITOWSKI
2/25/2020	AMZN MKTP US*ND4E75F4	TRAVIS	AKSAMITOWSKI
2/27/2020	AMAZON.COM*SD52H7WJ3	TRAVIS	AKSAMITOWSKI
2/27/2020	AMZN MKTP US*TF1YE7LS	TRAVIS	AKSAMITOWSKI
2/27/2020	AMZN MKTP US*TW7356M	TRAVIS	AKSAMITOWSKI
2/28/2020	WAYFAIR*WAYFAIR	TRAVIS	AKSAMITOWSKI
2/2/2020	APPLE.COM/BILL	ZOE A	STIEBER
2/18/2020	APPLE.COM/BILL	ZOE A	STIEBER
		City Admin/Mayor	
2/6/2020	SAMS CLUB #4745	JEANELLE	ANDERSEN
2/6/2020	SAMS CLUB #4745	JEANELLE	ANDERSEN
2/13/2020	KMC HISTORY COLORADO	JEANELLE	ANDERSEN
2/13/2020	CC GARAGE-3036401096	JEANELLE	ANDERSEN
2/25/2020	CITY OF FORT LUPTON	JEANELLE	ANDERSEN
2/28/2020	MUNICIPAL ONLINE PAYM	JEANELLE	ANDERSEN
		Court	
2/11/2020	FORMS FULFILLMENT CEN	KRISTEN	KINDLE
2/11/2020	FORMS FULFILLMENT CEN	KRISTEN	KINDLE
2/12/2020	210 TYLER BUSINESS FOR	KRISTEN	KINDLE
2/18/2020	USPS PO 0732220392	KRISTEN	KINDLE
		Finance	
2/1/2020	INDEED	LAURA A	HOWE
2/8/2020	BOULDER AREA HUM RES	LAURA A	HOWE
2/28/2020	INDEED	LAURA A	HOWE
2/3/2020	MONSTER WORLDWIDE, I	AMANDA	RICE
2/3/2020	MONSTER WORLDWIDE, I	AMANDA	RICE
2/21/2020	CBI ONLINE	AMANDA	RICE
2/25/2020	CBI ONLINE	AMANDA	RICE
2/27/2020	HR CERTIFICATION INSTI	AMANDA	RICE

HR/Admin			
1/31/2020	ACE HARDWARE OF FOR1	WILFRED	BERON
2/3/2020	ACE HARDWARE OF FOR1	WILFRED	BERON
2/10/2020	ACE HARDWARE OF FOR1	WILFRED	BERON
2/20/2020	ACE HARDWARE OF FOR1	WILFRED	BERON
1/30/2020	ACE HARDWARE OF FOR1	MARK	BROWN
2/6/2020	BEES LIGHTING	MARK	BROWN
2/6/2020	PURIFOY CHEVROLET	MARK	BROWN
2/11/2020	AFW-FIRESTONE #81	MARK	BROWN
2/12/2020	ACE HARDWARE OF FOR1	MARK	BROWN
2/18/2020	ACE HARDWARE OF FOR1	MARK	BROWN
2/21/2020	O'REILLY AUTO PARTS 44	MARK	BROWN
2/21/2020	ACE HARDWARE OF FOR1	MARK	BROWN
2/25/2020	ACE HARDWARE OF FOR1	MARK	BROWN
2/26/2020	ACE HARDWARE OF FOR1	MARK	BROWN
2/26/2020	ACE HARDWARE OF FOR1	MARK	BROWN
2/26/2020	AMZN MKTP US*0779P8XV	MARK	BROWN
2/27/2020	O'REILLY AUTO PARTS 44	MARK	BROWN
1/30/2020	TACO BELL PH 2528	DOUG	COOK
2/5/2020	ACE HARDWARE OF FOR1	DOUG	COOK
2/5/2020	RECREATION SUPPLY CO	DOUG	COOK
2/17/2020	ACE HARDWARE OF FOR1	DOUG	COOK
2/21/2020	POOLSUPPLY	DOUG	COOK
2/24/2020	SP * WDASWIM.COM	DOUG	COOK
2/25/2020	GREEN CO2 SYSTEMS	DOUG	COOK
2/25/2020	GREEN CO2 SYSTEMS	DOUG	COOK
2/26/2020	STORE SUPPLY WAREHO	JORDAN	EUTSLER
2/5/2020	ACE HARDWARE OF FOR1	RAYMOND A	JENKINS
2/21/2020	SAFEWAY #1045	RAYMOND A	JENKINS
2/28/2020	BENS BRICK OVEN PIZZA	RAYMOND A	JENKINS
2/12/2020	ROMARESTAURANT_1	STACEY	KEANAAINA
2/18/2020	AMZN MKTP US*0K6WV50	STACEY	KEANAAINA
2/20/2020	BSN SPORTS LLC	STACEY	KEANAAINA
2/27/2020	BSN SPORTS LLC	STACEY	KEANAAINA
2/27/2020	BSN SPORTS LLC	STACEY	KEANAAINA
1/30/2020	ACE HARDWARE OF FOR1	EARNEST B	KEEFOVER
2/13/2020	SAFEWAY #1045	EARNEST B	KEEFOVER
2/14/2020	ACE HARDWARE OF FOR1	EARNEST B	KEEFOVER
2/18/2020	ACE HARDWARE OF FOR1	EARNEST B	KEEFOVER

2/19/2020	ACE HARDWARE OF FORT	EARNEST B	KEEFOVER
2/24/2020	SAFEWAY #1045	EARNEST B	KEEFOVER
2/25/2020	THE HOME DEPOT #1552	EARNEST B	KEEFOVER
1/30/2020	SUBWAY 00541268	LINDA	KUDRNA
1/30/2020	SAFEWAY #1045	LINDA	KUDRNA
2/5/2020	SAFEWAY #1045	LINDA	KUDRNA
2/5/2020	SAFEWAY #1045	LINDA	KUDRNA
2/5/2020	SAFEWAY #1045	LINDA	KUDRNA
2/7/2020	CANDLELIGHT DINNER PL	LINDA	KUDRNA
2/10/2020	CANDLELIGHT DINNER PL	LINDA	KUDRNA
2/13/2020	VILLAGE INN REST 0017	LINDA	KUDRNA
2/19/2020	SAFEWAY #1045	LINDA	KUDRNA
2/20/2020	SAFEWAY #1045	LINDA	KUDRNA
2/20/2020	DENVER CENTER FOR TH	LINDA	KUDRNA
2/22/2020	WM SUPERCENTER #905	LINDA	KUDRNA
2/22/2020	OFFICEMAX/DEPOT 6251	LINDA	KUDRNA
2/26/2020	SAFEWAY #1045	LINDA	KUDRNA
2/27/2020	61177 - RITZ LOT	LINDA	KUDRNA
2/28/2020	TST* DAZZLE JAZZ	LINDA	KUDRNA
1/31/2020	AMZN MKTP US*842EQ40E	MICHAEL P	MCNAY
2/18/2020	QUALITY OF COLORADO F	CHRISTOPHER T	NELSON
2/18/2020	QUALITY OF COLORADO F	CHRISTOPHER T	NELSON
1/27/2020	6372 DOMINOS PIZZA	BRIAN	OSWALT
2/4/2020	SAFEWAY #1045	BRIAN	OSWALT
2/5/2020	SAFEWAY #1045	BRIAN	OSWALT
2/6/2020	64017 - 5280 LOT	BRIAN	OSWALT
2/6/2020	THE SMOKEHOUSE	BRIAN	OSWALT
2/6/2020	BUBBA CHINOS	BRIAN	OSWALT
2/10/2020	PAYPAL *HAOLING EBAY I	BRIAN	OSWALT
2/10/2020	WHITESIDES BOOTS AND	BRIAN	OSWALT
2/10/2020	ACE HARDWARE OF FORT	BRIAN	OSWALT
2/29/2020	CARHARTT	BRIAN	OSWALT
2/12/2020	KING SOOPERS #0105	MONTY	SCHUMAN
2/15/2020	LINENTABLECLOTH.COM	MONTY	SCHUMAN
2/20/2020	SIGNS BY TOMORROW	MONTY	SCHUMAN
2/4/2020	SQ *STEVE SPANGLER SC	JULIE	SEEDORF
2/4/2020	SQ *STEVE SPANGLER SC	JULIE	SEEDORF
2/4/2020	SQ *STEVE SPANGLER SC	JULIE	SEEDORF
2/4/2020	SQ *STEVE SPANGLER SC	JULIE	SEEDORF

2/4/2020	SQ *STEVE SPANGLER SC	JULIE	SEEDORF
2/4/2020	SQ *STEVE SPANGLER SC	JULIE	SEEDORF
2/4/2020	SQ *STEVE SPANGLER SC	JULIE	SEEDORF
2/5/2020	WAL-MART #1659	JULIE	SEEDORF
2/5/2020	WAL-MART #1659	JULIE	SEEDORF
2/7/2020	DISCOUNTSCH 800627282	JULIE	SEEDORF
2/19/2020	PHOENIX GOLD MINE	JULIE	SEEDORF
2/19/2020	APEX PARK AND RECREA	JULIE	SEEDORF
2/20/2020	FORT FUN - CO	JULIE	SEEDORF
2/21/2020	SAFEWAY #1045	JULIE	SEEDORF
2/22/2020	REI.COM	JULIE	SEEDORF
2/29/2020	REI.COM	JULIE	SEEDORF
1/31/2020	DENVER MART RSVP	TYLER	TARPLEY
2/6/2020	AMZN MKTP US*8X3C09V	TYLER	TARPLEY
2/11/2020	AMZN MKTP US*SI0RA130	TYLER	TARPLEY
2/11/2020	AMZN MKTP US*SI0RA130	TYLER	TARPLEY
2/25/2020	IMPRINT PLUS	TYLER	TARPLEY
2/5/2020	ACE HARDWARE OF FOR	DOUGLAS G	TRETTER
2/18/2020	ACE HARDWARE OF FOR	DOUGLAS G	TRETTER
2/19/2020	ACE HARDWARE OF FOR	DOUGLAS G	TRETTER
2/19/2020	ACE HARDWARE OF FOR	DOUGLAS G	TRETTER
2/24/2020	ACE HARDWARE OF FOR	DOUGLAS G	TRETTER
2/25/2020	BUBBA CHINOS	DOUGLAS G	TRETTER
2/6/2020	VISTAPR*VISTAPRINT.CO	IMOGENE	YOKOOJI
2/6/2020	SAMS CLUB #4987	IMOGENE	YOKOOJI
2/6/2020	SAMS CLUB #4987	IMOGENE	YOKOOJI
2/6/2020	SAMS CLUB #4987	IMOGENE	YOKOOJI
2/6/2020	SAMS CLUB #4987	IMOGENE	YOKOOJI
2/8/2020	SAMS CLUB #4770	IMOGENE	YOKOOJI
2/15/2020	STAMPS.COM	IMOGENE	YOKOOJI
2/24/2020	SAMSCLUB.COM	IMOGENE	YOKOOJI
2/24/2020	SAMSCLUB.COM	IMOGENE	YOKOOJI
2/25/2020	SAMSCLUB.COM	IMOGENE	YOKOOJI
2/25/2020	STAPLES DIRECT	IMOGENE	YOKOOJI
2/26/2020	GIH*GLOBALINDUSTRIALE	IMOGENE	YOKOOJI
2/26/2020	GIH*GLOBALINDUSTRIALE	IMOGENE	YOKOOJI
2/26/2020	SAMS CLUB #4987	IMOGENE	YOKOOJI
2/26/2020	SAMS CLUB #4987	IMOGENE	YOKOOJI
2/26/2020	SAMS CLUB #4987	IMOGENE	YOKOOJI

2/26/2020	SAMS CLUB #4987	IMOGENE	YOKOOJI
2/26/2020	SAMS CLUB #4987	IMOGENE	YOKOOJI
2/27/2020	BIGTIMECLOCKS	IMOGENE	YOKOOJI
		Parks & Recreation	
1/31/2020	COREN PRINTING	TERRIE	ASAY
1/31/2020	USPS PO 0732220392	TERRIE	ASAY
1/31/2020	USPS PO 0732220392	TERRIE	ASAY
1/31/2020	USPS PO 0732220392	TERRIE	ASAY
1/31/2020	USPS PO 0732220392	TERRIE	ASAY
2/4/2020	USPS PO 0732220392	TERRIE	ASAY
2/4/2020	USPS PO 0732220392	TERRIE	ASAY
2/4/2020	USPS PO 0732220392	TERRIE	ASAY
2/5/2020	USPS PO 0732220392	TERRIE	ASAY
2/5/2020	USPS PO 0732220392	TERRIE	ASAY
2/5/2020	USPS PO 0732220392	TERRIE	ASAY
2/10/2020	USPS PO 0732220392	TERRIE	ASAY
2/11/2020	WENDYS STORE #11693	TERRIE	ASAY
2/13/2020	S2 TEST KITS	TERRIE	ASAY
2/19/2020	NAPA AUTO PARTS	TERRIE	ASAY
2/21/2020	QDOBA MEXICAN EATS #2	TERRIE	ASAY
2/22/2020	AMZN MKTP US*5Q8KX42E	TERRIE	ASAY
2/24/2020	USPS PO 0732220392	TERRIE	ASAY
2/24/2020	USPS PO 0732220392	TERRIE	ASAY
2/24/2020	USPS PO 0732220392	TERRIE	ASAY
2/24/2020	USPS PO 0732220392	TERRIE	ASAY
2/24/2020	USPS PO 0732220392	TERRIE	ASAY
2/25/2020	SIRCHIE FINGER PRINT L	TERRIE	ASAY
2/25/2020	USPS PO 0732220392	TERRIE	ASAY
2/25/2020	USPS PO 0732220392	TERRIE	ASAY
2/26/2020	SAFEWAY FUEL #1045	TERRIE	ASAY
2/15/2020	CIRCLE K # 44109	WILLIAM A	CARNES
2/21/2020	SAFEWAY FUEL #1045	RANDALL	CURAMENG
2/7/2020	CIRCLE K # 44109	TREY M	DEVICH
2/8/2020	SAFEWAY FUEL #1045	TREY M	DEVICH
2/12/2020	CIRCLE K # 44109	TREY M	DEVICH
2/15/2020	CIRCLE K # 44109	TREY M	DEVICH
2/16/2020	CIRCLE K # 44109	TREY M	DEVICH
2/18/2020	SAFEWAY FUEL #1045	PERRY	DOUGLAS
2/7/2020	SAFEWAY FUEL #1045	GUADALUPE	GALLEGOS OCHOA

2/8/2020	SAFEWAY FUEL #1045	GUADALUPE	GALLEGOS OCHOA
2/9/2020	SAFEWAY FUEL #1045	GUADALUPE	GALLEGOS OCHOA
2/13/2020	SAFEWAY FUEL #1045	GUADALUPE	GALLEGOS OCHOA
2/15/2020	SAFEWAY FUEL #1045	GUADALUPE	GALLEGOS OCHOA
2/23/2020	CIRCLE K # 44109	GUADALUPE	GALLEGOS OCHOA
2/12/2020	CIRCLE K # 44109	JOSHUA R	GODDARD
2/19/2020	CIRCLE K # 44109	JOSHUA R	GODDARD
2/25/2020	CIRCLE K # 44109	JOSHUA R	GODDARD
2/8/2020	CIRCLE K # 44109	PAUL	GROSSMAN
2/8/2020	ACE HARDWARE OF FORT	PAUL	GROSSMAN
2/13/2020	CIRCLE K # 44109	PAUL	GROSSMAN
2/15/2020	CIRCLE K # 44109	PAUL	GROSSMAN
2/22/2020	CIRCLE K # 44109	PAUL	GROSSMAN
2/27/2020	CIRCLE K # 44109	PAUL	GROSSMAN
2/22/2020	SAFEWAY FUEL #1045	GARRETT	HACKETT
2/23/2020	SAFEWAY FUEL #1045	GARRETT	HACKETT
2/23/2020	FORT LUPTON CAR WASH	GARRETT	HACKETT
2/14/2020	SOS REGISTRATION FEE	GREG S	HART
2/20/2020	CIRCLE K # 44109	GREG S	HART
1/31/2020	CIRCLE K # 44109	DAVID	HEMPEL
2/1/2020	JAX OUTDOOR GEAR RAN	DAVID	HEMPEL
2/5/2020	WALMART.COM	DAVID	HEMPEL
2/6/2020	BLUE FORCE GEAR INC	DAVID	HEMPEL
2/16/2020	JAX OUTDOOR GEAR RAN	DAVID	HEMPEL
2/17/2020	GALLS	DAVID	HEMPEL
2/18/2020	NATIONAL LAW ENFORCE	DAVID	HEMPEL
2/20/2020	CIRCLE K # 44109	DAVID	HEMPEL
2/21/2020	APPSVERSE, INC.	DAVID	HEMPEL
2/21/2020	APPSVERSE, INC.	DAVID	HEMPEL
2/22/2020	GOOGLE *YOUTUBEPREM	DAVID	HEMPEL
2/22/2020	GOOGLE*DOMAINS	DAVID	HEMPEL
2/22/2020	SKYPE.COM/GO/BILL	DAVID	HEMPEL
2/24/2020	SKYPE.COM/GO/BILL	DAVID	HEMPEL
2/1/2020	STUBS GAS & OIL	FRYAR	JOHN
2/3/2020	BUDGETMAILBOXES	FRYAR	JOHN
2/6/2020	TROPHY DEPOT	FRYAR	JOHN
2/6/2020	EAGLE ENGRAVING	FRYAR	JOHN
2/7/2020	TLO TRANSUNION	FRYAR	JOHN
2/10/2020	CIRCLE K # 44109	FRYAR	JOHN

2/21/2020	MOULTRIE MOBILE	FRYAR	JOHN
2/21/2020	MOULTRIE MOBILE	FRYAR	JOHN
2/21/2020	SAFEWAY FUEL #1045	FRYAR	JOHN
2/26/2020	SAFEWAY FUEL #1045	FRYAR	JOHN
2/7/2020	SBM TRAVEL SHOP	VICTORIA K	MIRAGLIA
2/8/2020	SAFEWAY FUEL #1045	VICTORIA K	MIRAGLIA
2/9/2020	CIRCLE K # 44109	VICTORIA K	MIRAGLIA
2/14/2020	SAFEWAY FUEL #1045	VICTORIA K	MIRAGLIA
2/15/2020	SAFEWAY FUEL #1045	VICTORIA K	MIRAGLIA
2/21/2020	SAFEWAY FUEL #1045	VICTORIA K	MIRAGLIA
2/12/2020	CIRCLE K # 44109	SHAWNA M	PAINTIN
2/16/2020	CIRCLE K # 44109	SHAWNA M	PAINTIN
2/19/2020	CIRCLE K # 44109	SHAWNA M	PAINTIN
2/23/2020	SAFEWAY FUEL #1045	SHAWNA M	PAINTIN
2/25/2020	SAFEWAY FUEL #1045	SHAWNA M	PAINTIN
2/26/2020	SAFEWAY FUEL #1045	SHAWNA M	PAINTIN
2/13/2020	CIRCLE K # 44109	JEREMY D	SAGNER
2/18/2020	SAFEWAY FUEL #1045	JEREMY D	SAGNER
2/20/2020	CIRCLE K # 44109	JEREMY D	SAGNER
2/25/2020	CIRCLE K # 44109	JEREMY D	SAGNER
2/11/2020	SAFEWAY FUEL #1045	ANDREW	TOVES
2/12/2020	SAFEWAY FUEL #1045	ANDREW	TOVES
2/17/2020	SAFEWAY FUEL #1045	ANDREW	TOVES
2/18/2020	NATIONAL LAW ENFORCE	ANDREW	TOVES
2/19/2020	CIRCLE K # 44109	ANDREW	TOVES
2/20/2020	SAFEWAY FUEL #1045	ANDREW	TOVES
2/25/2020	CIRCLE K # 44109	ANDREW	TOVES
2/26/2020	CIRCLE K # 44109	ANDREW	TOVES
2/12/2020	SAFEWAY FUEL #1045	KAITLYNN M	WALKER
2/16/2020	CIRCLE K # 44109	KAITLYNN M	WALKER
2/23/2020	SAFEWAY FUEL #1045	KAITLYNN M	WALKER
2/25/2020	CIRCLE K # 44109	KAITLYNN M	WALKER
2/13/2020	CIRCLE K # 44109	BRYAN	WHYARD
2/16/2020	CIRCLE K # 44109	BRYAN	WHYARD
2/20/2020	SP * NOTARYSTAMP.COM	BRYAN	WHYARD
2/22/2020	CIRCLE K # 44109	BRYAN	WHYARD
2/28/2020	CIRCLE K # 44109	BRYAN	WHYARD
		Public Safety	
2/7/2020	ACT*TYLER TECHNOLOGI	RUBY	FORD

2/11/2020	TRIMBLE INC.	JACOB W	FREIER
2/27/2020	SAFEWAY #1045	JACOB W	FREIER
2/27/2020	FRONTIER	JACOB W	FREIER
2/26/2020	SAFEWAY #1045	ALYSSA	KNUTSON
2/26/2020	SAFEWAY #1045	ALYSSA	KNUTSON
2/26/2020	SAFEWAY #1045	ALYSSA	KNUTSON
2/26/2020	SAFEWAY #1045	ALYSSA	KNUTSON
		Community Development	

Product Description		Net Cost	
GF-ISB DESSERT CREAM GOODS-CITY ADM	$	16.99	100-1100-550100
GF-ISB DESSERT CREAM GOODS-CITY ADM	$	16.99	100-1100-550100
GF-EVERYDAY INDIVIDUAL CARDS-CITY ADM	$	4.69	100-1100-550100
GF-ROSE ARRANGEMENTS-CITY ADM	$	44.99	100-1100-550100
GF-SPARKY FLOOR LINER-MISC	$	131.14	100-1800-553500
GF-LAURA BUSINESS CARDS-HR	$	24.58	100-1400-520100
	$	**239.38**	
GF-ELGIN SWEEPER PARTS-STREETS	$	16.99	100-3100-532400
GF-FASTENERS-STREETS	$	8.56	100-3100-532400
GF-SMALL ENGINE REPAIRS-STREETS	$	22.93	100-3100-532400
UF-SMALL ENGINE REPAIRS-W LINES	$	22.93	400-5000-532400
GF-SWEEPER #17 PARTS-STREETS	$	67.56	100-3100-532400
UF-SOLDER FOR REPAIRING LINES-W LINES	$	31.16	400-5000-532400
GF-PROPANE TANK REFILLS-STREETS	$	19.99	100-3100-520100
GF-PARTS-STREETS	$	66.84	100-3100-532400
GF-SHOP SUPPLIES-PW SHOP	$	63.72	100-3000-520100
GF-CLEANING SUPPLIES-PW SHOP	$	14.58	100-3000-520100
UF-UNL PRM-90/91OC-S LINES	$	26.47	400-5130-520800
GF-BASE BOARD NAILS-PW SHOP	$	4.99	100-3000-532500
GF-D2 LS-STREETS	$	99.62	100-3100-520800
GF-SPRAYPAINT FLUO PINK-STREETS	$	5.99	100-3100-520100
UF-WATER DISPENSER PARTS-W LINES	$	31.29	400-5000-520900
UF-WATER DISPENSER PARTS-W LINES	$	5.50	400-5000-520900
GF-D2 LS-STREETS	$	50.00	100-3100-520800
UF-D2 LS-S LINES	$	50.00	400-5130-520800
GF-D2 LS-STREETS	$	33.33	100-3100-520800
UF-D2 LS-W LINES	$	33.33	400-5000-520800

UF-D2 LS-S LINES	$	33.34	400-5130-520800
UF-D2 LS-S LINES	$	42.60	400-5130-520800
UF-D2 LS-W LINES	$	42.60	400-5000-520800
GF-D2 LS-STREETS	$	32.43	100-3100-520800
UF-D2 LS-S LINES	$	32.43	400-5130-520800
UF-D2 LS-W LINES	$	32.44	400-5000-520800
GF-PAINT SUPPLIES-PW SHOP	$	320.07	100-3000-532500
GF-ESLP BOARD-PW SHOP	$	132.30	100-3000-532500
GF-D2 LS-STREETS	$	73.53	100-3100-520800
GF-UNL REG 86/87 OC-STREETS	$	59.48	100-3100-520800
GF-HUSQVARNA K750 / K760 CLUTCH ASSY.-STREE	$	37.42	100-3100-532400
GF-WALLPLATES/RECEPTACLES-PW SHOP	$	24.29	100-3000-532500
GF-WALLPLATES/RECEPTACLES-PW SHOP	$	37.19	100-3000-532500
GF-PAINT SUPPLIES-PW SHOP	$	80.46	100-3000-532500
UF-UNL PRM-90/91OC-S LINES	$	45.50	400-5130-520800
GF-CLEANING SUPPLIES-PW SHOP	$	55.93	100-3000-520100
GF-FLINTS FOR TORCH-PW SHOP	$	9.18	100-3000-520100
GF-SWITCH PLATE-PW SHOP	$	2.99	100-3000-520100
UF-UNL PRM-90/91OC-S LINES	$	26.74	400-5130-520800
UF-CAM TRUCK SUPPLIES-S LINES	$	76.94	400-5130-520800
GF-D2 LS-STREETS	$	70.03	100-3100-520800
GF-ANGLE BROOM/PAINT SUPPLIES-PW SHOP	$	47.32	100-3000-532500
GF-SHOP SUPPLIES-PW SHOP	$	14.98	100-3000-520100
GF-CAULK GUN-PW SHOP	$	8.59	100-3000-532500
UF-SEWER LINE REPAIRS-S LINES	$	18.97	400-5130-520100
GF-TRASH BAGS-PW SHOP	$	13.99	100-3000-520100
GF-BATTERIES/PINE SOL-PW SHOP	$	21.98	100-3000-520100
UF-ROPE FOR DUMP-S LINES	$	12.99	400-5130-532400
	$	**2,082.49**	
GF-CABLE MATTERS 10GBASE-CU PASSIVE DI-IT	$	99.96	100-1500-531050
GF-TEMPUR-PEDIC TP9000 ERGONOMIC MESH-CIT	$	235.57	100-1100-531050
GF-LEYI SAMSUNG GALAXY A50 CASE, GALAX-IT	$	9.98	100-1500-531050
GF-SUPCASE UNICORN BEETLE PRO SERIES C-IT	$	18.85	100-1500-531050
GF-LAPTOP KEYBOARD FOR PANASONIC TOUGH-I	$	186.87	100-1500-531050
GF-YOUMAKER CASE FOR IPHONE 8 PLUS & I-IT	$	13.99	100-1500-531050
GF-WIRELESS KEYBOARD AND MOUSE, JELLY-IT	$	15.99	100-1500-531050
GF-ERGONOMIC OFFICE CHAIR WITH ADJUSTA-PD	$	279.98	100-2500-531050
GF-FLEXISPOT ELECTRIC HEIGHT ADJUSTABL-PD F	$	579.98	100-2500-531050
GF-3 DRAWER METAL MOBILE FILE CABINET-PD RE	$	214.48	100-2500-531050

GF-LOGITECH MX VERTICAL WIRELESS MOUSE-PD	$	167.98	100-2500-531050
GF-SUPCASE UNICORN BEETLE PRO SERIES P-IT	$	19.99	100-1500-531050
GF-FLEXISPOT ELECTRIC HEIGHT ADJUSTABL-CITY	$	279.99	100-1100-531050
GF-ELETAB DUAL MONITOR MOUNT STAND FUL-IT	$	94.99	100-1500-531050
GF-SUPCASE UNICORN BEETLE PRO SERIES C-IT	$	78.64	100-1500-520100
GF-ANNUAL 2020 CGAIT MEMBERSHIP DUES-IT	$	330.00	100-1500-530800
GF-MUSOU HDMI TO 1080P COMPONENT VIDEO-IT	$	29.99	100-1500-531050
GF-ELECTRIC CORNER STANDING DESK CONVE-IT	$	279.99	100-1500-531050
GF-CABLE MATTERS UNIDIRECTIONAL DISPLA-IT	$	21.98	100-1500-531050
GF-CABLE MATTERS 2-PACK 6 OUTLET SURGE-IT	$	25.49	100-1500-531050
GF-CABLE MATTERS UNIDIRECTIONAL DISPLA-IT	$	27.98	100-1500-531050
GF-VIEWSONIC VA2459-SMH 24 INCH IPS 10-IT	$	239.98	100-1500-531050
GF-LOGITECH MK270 WIRELESS KEYBOARD AN-IT	$	79.92	100-1500-531050
GF-UBIQUITI POE-48-24W 48VDC 0.5A OUTP-IT	$	13.90	100-1500-531050
GF-FLEXPRO POWER 36 INCH ELECTRIC STAN-CITY	$	299.99	100-1300-520200
REC-IVAN 2 DRAWER FILE CABINET	$	157.32	500-6700-520100
GF-OTHER MISCELLANEOUS TRANS-LEGIS	$	9.99	100-1000-530600
GF-CLOUD STORAGE-LEGIS	$	2.99	100-1000-530600
	$	**3,816.76**	
GF-GENERAL SUPPLIES-ADMIN	$	215.76	100-1120-520100
GF-WATER-COURT	$	18.42	100-1200-520100
GF-KMC HISTORY COLORADO-COURT	$	8.21	100-1200-533000
GF-GARAGE PARKING CML MEETING-COURT	$	12.00	100-1200-533000
GF-ONLINE PAYMENT TESTING-COURT	$	1.00	100-1200-552900
GF-ONLINE PAYMENT TESTING-COURT	$	2.50	100-1200-552900
	$	**42.13**	
GF-BUSINESS FORMS-FIN	$	170.07	100-1600-520100
GF-BUSINESS FORMS-FIN	$	(73.32)	100-1600-520100
GF-BUSINESS FORMS-FIN	$	73.32	100-1600-520100
GF-PRIORITY-FIN	$	16.30	100-1600-531800
	$	**186.37**	
GF-JAN2020 ADVERTISING RECRUITING-HR	$	132.03	100-1400-532300
GF-BAHRA LUNCH MEETING-HR	$	35.00	100-1400-532800
GF-FEB2020 ADVERTISING RECRUITING-HR	$	501.36	100-1400-532300
GF-MONSTER FOR EMPLOYERS-HR	$	249.00	100-1400-532300
GF-MONSTER FOR EMPLOYERS-HR	$	249.00	100-1400-532300
GF-CBI SCREENS-HR	$	5.00	100-1400-531900
GF-CBI SCREENS-HR	$	5.00	100-1400-531900
GF-HR CERTIFICATION - AMANDA-HR	$	420.00	100-1400-532800

	$	**1,596.39**	
REC-PRIMER & PAINT SUPPLIES	$	67.71	500-6700-532500
REC-WALL CLOCK	$	8.99	500-6700-532500
REC-T8 BULBS	$	17.98	500-6700-532500
REC-BATTERIES	$	9.99	500-6700-532500
GF-KICK DOWN DOOR HOLDER/DOOR STOP-FAC	$	21.16	100-3300-532500
CPR-LIGHTING SYSTEMS-COMM CTR	$	147.90	230-6000-532500
GF-SPARK VEHICLE REPAIRS-FAC	$	577.35	100-3300-532700
CPR-TABLES/CHAIRS-COMM CTR	$	885.00	230-6000-531050
CPR-BATTERIES-COMM CTR	$	16.99	230-6000-520100
CPR-WALL REPAIR TOOLS-COMM CTR	$	49.13	230-6000-532500
CPR-BATTERIES-COMM CTR	$	105.88	230-6000-532700
CPR-TRASH CANS-COMM CTR	$	105.96	230-6000-520100
CPR-KEY TAGS-COMM CTR	$	11.46	230-6000-520100
GF-BASIN WRENCH/KITCHEN FAUCET-FAC	$	156.98	100-3300-532500
GF-WHITE COVER-FAC	$	3.99	100-3300-532500
GF-TIMEMIST METERED FRAGRANCE DISPENSE-FA	$	76.46	100-3300-520300
GF-WIPER BLADE-FAC	$	28.49	100-3300-532700
REC-TACO BELL	$	11.09	500-6700-532800
REC-CLEANING SUPPLIES	$	45.89	500-6700-520100
REC-POOL/SPA SUPPLIES	$	324.72	500-6700-520400
REC-BATTERIES	$	5.99	500-6700-520100
REC-VACUUM SAFETY RELEASE	$	880.00	500-6700-532400
REC-SWIMMING GOGGLES	$	955.50	500-6700-551500
REC-POOL/SPA SUPPLIES	$	141.86	500-6700-520400
REC-POOL/SPA SUPPLIES	$	153.94	500-6700-530600
GOLF-PEG HOOKS & WIRE BASKETS-PRO SHOP	$	46.81	600-6800-520100
GF-BATTERY CHG KIT, SAW BLADE-PARKS	$	192.98	100-3500-520100
GF-CREW LUNCH-PARKS	$	44.43	100-3500-532800
GF-BENS PIZZA-PARKS	$	59.78	100-3500-532800
CPR-PIZZA-ATHL	$	9.50	230-6020-533000
REC-EEMB 3.6 V C SIZE LITHIUM BATTERY C	$	34.20	500-6700-520100
CPR-OTHER MISCELLANEOUS TRANS-ATHL	$	317.80	230-6020-520100
CPR-MACGREGOR EQUALIZER SOCCER-ATHL	$	95.96	230-6020-520100
CPR-MACGREGOR EQUALIZER SOCCER-ATHL	$	287.88	230-6020-520100
GF-FASTENERS-PARKS	$	3.56	100-3500-520100
GF-ISB BREAKFAST DONUTS-PARKS	$	10.38	100-3500-520100
GF-WORKCREW EQUIPMENT-COURT	$	89.95	100-1200-552900
GF-MULTI MIX CONTAINER-PARKS	$	5.37	100-3500-520100

GF-GRAFFITTI REMOVER-PARKS	$	19.98	100-3500-520100
GF-CREAMER AND UTENSILS-PARKS	$	9.28	100-3500-520100
GF-2X2-8 WW-PARKS	$	13.68	100-3500-520100
CPR-SUBWAY GIFT CARDS	$	20.00	230-110150
CPR-BUNS/GIFT CARDS POTLUCK	$	44.65	230-110150
CPR-ISB BREAKFAST DONUTS-SENIORS	$	6.99	230-6050-553900
CPR-BANANAS-SENIORS	$	1.72	230-6050-553900
CPR-GRAPES-SENIORS	$	5.99	230-6050-553900
CPR-CANDLELIGHT THEATER-SENIORS	$	1,000.00	230-6050-553900
CPR-CANDLELIGHT THEATER-SENIORS	$	151.00	230-6050-553900
CPR-VALENTINE EVENT-SENIORS	$	44.45	230-6050-553900
CPR-ISB BREAKFAST DONUTS-SENIORS	$	14.96	230-6050-553900
CPR-VEGETABLE GRAIN PASTA SALA-SENIORS	$	15.24	230-6050-553900
CPR-BEHIND THE SCENES TOUR-SENIORS	$	160.00	230-6050-553900
CPR-SENIOR SUPPLIES	$	8.97	230-110150
CPR-BOARD,FORAY,MAG D/E,36X48,ALUM	$	148.30	230-110150
CPR-ISB BREAKFAST DONUTS-SENIORS	$	13.68	230-6050-553900
CPR-PARKING FEES-SENIORS	$	13.00	230-6050-553900
CPR-DAZZLE SENIOR TRIP-SENIORS	$	525.00	230-6050-553900
GOLF-DEWALT OEM N126162 MITER SAW DUST B-M	$	12.27	600-6850-520100
GF-AED PHILLIPS FRX/ONLINE BATTERY (5)-FAC	$	869.25	100-3300-520100
GF-AED PHILLIPS FRX/ONLINE BATTERY-FAC	$	173.85	100-3300-520100
GF-PIZZA-PARKS	$	40.56	100-3500-532800
GF-HALF N HALF 10 5 MF CRE-PARKS	$	3.11	100-3500-520100
GF-AIR FRESHENER-PARKS	$	22.96	100-3500-520100
GF-PARKING FEES-PARKS	$	25.00	100-3500-533000
GF-GEORGIA BOYS-PARKS	$	99.47	100-3500-532800
GF-BUBBA CHINOS-PARKS	$	32.28	100-3500-532800
GF-TAILGATE COVER MOLDING TOP PROTECTO-PA	$	57.30	100-3500-532400
GF-BIB LINED HIP ZIP-PARKS	$	130.19	100-3500-533100
GF-UTILITY GLOVES-PARKS	$	34.08	100-3500-520100
GF-CARHARRT RAIN DEFENDER JACKET-PARKS	$	61.73	100-3500-533100
CPR-SENIOR DOUNUTS/COFFEE-SENIORS	$	18.69	230-6050-553900
CPR-TABLECLOTHS/NAPKINS-COMM CTR	$	191.08	230-6000-520100
CPR-4'X8' SIGN-COMM CTR	$	509.00	230-6000-520100
REC-MAGIC SAND	$	7.99	500-6700-553950
REC-BOO BUBBLES	$	24.99	500-6700-553950
REC-JELLY MARBLES	$	9.99	500-6700-553950
REC-BALLOON HELICOPTER	$	12.99	500-6700-553950

REC-COLORFUL GROWING ORBS	$	9.99	500-6700-553950	
REC-BREAK YOUR OWN GEODES	$	11.99	500-6700-553950	
REC-FLYING FILM CANISTERS	$	23.99	500-6700-553950	
REC-MULTIPACK CARDS	$	13.96	500-6700-520200	
REC-GENERAL SUPPLIES	$	171.38	500-6700-520100	
REC-EASY LABEL BINS	$	51.24	500-6700-553960	
REC-PHOENIX GOLD MINE TOURS	$	129.74	500-6700-553950	
REC-DAY CAMP FIELD TRIP DEPOSIT	$	62.50	500-6700-553950	
REC-DEPOSIT FOR 8/5 EVENT	$	50.00	500-6700-553950	
REC-THERMOMETERS COVERS DIGITA	$	15.98	500-6700-520100	
REC-CARIBINERS	$	31.53	500-6700-520100	
REC-CARABINER, CLIMBING GLOVES	$	60.77	500-6700-520100	
GOLF-DENVER MART-PRO SHOP	$	95.00	100-110150	600-6800-531300
GOLF-20PACK POP ADJUSTABLE PLASTIC CLIP--PR	$	21.37	100-110150	600-6800-520100
GOLF-WALI DUAL LCD MONITOR FULLY ADJUSTA-P	$	56.65	100-110150	600-6800-520100
GOLF-VIVO FULL MOTION WALL MOUNT FOR UP-PF	$	16.02	100-110150	600-6800-520100
GOLF-REUSABALE METAL BADGES-PRO SHOP	$	263.79	100-110150	600-6800-533100
GF-BATTERIES, UJOINT, COUPLINGS ETC-PARKS	$	80.99	100-3500-520100	
GF-BRUSH CUP, SPRAY PAINT-PARKS	$	17.58	100-3500-520100	
GF-GENERAL SUPPLIES-PARKS	$	2.49	100-3500-520100	
GF-RAGS AND GENERAL SUPPLIES-PARKS	$	28.97	100-3500-520100	
GF-MARKING PAINT-PARKS	$	13.18	100-3500-520100	
GF-BUBBA CHINOS-PARKS	$	35.25	100-3500-532800	
CPR-BUSINESS CARDS BIDMEAD-MUSEUM	$	16.84	230-6040-520100	
REC-CLEANING/GENERAL SUPPLIES	$	33.94	500-6700-554000	
REC-CLEANING/GENERAL SUPPLIES	$	55.92	500-6700-520200	
REC-CLEANING/GENERAL SUPPLIES	$	25.98	500-6700-551500	
REC-CLEANING/GENERAL SUPPLIES	$	16.16	500-6700-520300	
CPR-COFFEE/TEA SUPPLIES-COMM CTR	$	51.02	230-6000-520100	
REC-STAMPS.COM	$	17.99	500-6700-530600	
REC-OFFICE CHAIR	$	117.98	500-6700-520100	
REC-FILE CABINER	$	349.00	500-6700-531050	
REC-GENERAL SUPPLIES	$	116.86	500-6700-531050	
REC-STAPLES SORINA BONDED LEATHER CHAIR	$	119.99	500-6700-520100	
CPR-VEOLIA SUPPLY-191 LARGE U-TUBE, HID-COM	$	139.84	230-6000-530600	
CPR-VEOLIA SUPPLY-065 LARGE 4 FOOT FLUO-CON	$	131.23	230-6000-530600	
REC-CLEANING/GENERAL SUPPLIES	$	13.82	500-6700-553950	
REC-CLEANING/GENERAL SUPPLIES	$	9.28	500-6700-554000	
REC-CLEANING/GENERAL SUPPLIES	$	30.96	500-6700-520300	

CPR-CLEANING/GENERAL SUPPLIES-COMM CTR	$	91.28	230-6000-520300
CPR-CLEANING/GENERAL SUPPLIES-COMM CTR	$	9.98	230-6000-520100
REC-HUGE 5" NUMBER CLOCK	$	167.00	500-6700-520100
	$	**13,342.11**	
GF-TOW STICKERS-COMM SVCS	$	170.00	100-2200-520100
GF-EVIDENCE LETTER-PD	$	3.80	100-2100-531800
GF-EVIDENCE LETTER-PD	$	3.80	100-2100-531800
GF-EVIDENCE LETTER-PD	$	0.55	100-2100-531800
GF-EVIDENCE LETTER-PD	$	2.05	100-2100-531800
GF-VEHICLE IMPOUND-PD	$	5.80	100-2100-531800
GF-VEHICLE IMPOUND-PD	$	5.80	100-2100-531800
GF-VEHICLE IMPOUND-PD	$	5.80	100-2100-531800
GF-VEHICLE IMPOUND-PD	$	5.80	100-2100-531800
GF-VEHICLE IMPOUND-PD	$	5.80	100-2100-531800
GF-VEHICLE IMPOUND-PD	$	5.80	100-2100-531800
GF-EVIDENCE LETTER-PD	$	2.05	100-2100-531800
GF-MEALS 20FP01265-PD	$	20.71	100-2100-533000
GF-FIELD TEST KITS-PD	$	202.50	100-2100-520100
GF-DEICER-PD	$	23.70	100-2100-520800
GF-QDOBA/ORAL BOARDS MEMBERS-PD	$	50.89	100-2100-533000
GF-EAMAY 24 NUMBERED CLASSROOM POCKET-PI	$	18.98	100-2100-520100
GF-VEHICLE IMPOUND-PD	$	5.80	100-2100-531800
GF-VEHICLE IMPOUND-PD	$	5.80	100-2100-531800
GF-VEHICLE IMPOUND-PD	$	5.80	100-2100-531800
GF-EVIDENCE LETTER-PD	$	3.80	100-2100-531800
GF-EVIDENCE LETTER-PD	$	1.00	100-2100-531800
GF-EVIDENCE PACKAGING SUPPLIES-PD	$	214.23	100-2100-520100
GF-FIRST-CLASS LETTER-PD	$	5.80	100-2100-531800
GF-FIRST-CLASS LETTER-PD	$	5.80	100-2100-531800
GF-UA GASOLINE-PD	$	37.00	100-2100-531800
GF-UNL REG 86/87 OC-PD	$	15.19	100-2100-520800
GF-UA GASOLINE-PD	$	26.34	100-2100-520800
GF-UNL REG 86/87 OC-PD	$	29.00	100-2100-520800
GF-UA GASOLINE-PD	$	34.78	100-2100-520800
GF-UNL REG 86/87 OC-PD	$	30.94	100-2100-520800
GF-UNL REG 86/87 OC-PD	$	21.25	100-2100-520800
GF-UNL REG 86/87 OC-PD	$	31.08	100-2100-520800
GF-UA GASOLINE-PD	$	29.60	100-2100-520800
GF-UA GASOLINE-PD	$	16.90	100-2100-520800

GF-UA GASOLINE-PD	$	46.64	100-2100-520800
GF-UA GASOLINE-PD	$	30.00	100-2100-520800
GF-UA GASOLINE-PD	$	22.74	100-2100-520800
GF-UA GASOLINE-PD	$	14.78	100-2100-520800
GF-UNL REG 86/87 OC-PD	$	15.00	100-2100-520800
GF-UNL REG 86/87 OC-PD	$	48.32	100-2100-520800
GF-UNL REG 86/87 OC-PD	$	29.00	100-2100-520800
GF-UNL REG 86/87 OC-PD	$	31.01	100-2100-520800
GF-UNL REG 86/87 OC-PD	$	13.17	100-2100-520800
GF-SPLIT KEY RING-PD	$	3.96	100-2100-520100
GF-UNL REG 86/87 OC-PD	$	26.82	100-2100-520800
GF-UNL REG 86/87 OC-PD	$	21.97	100-2100-520800
GF-UNL REG 86/87 OC-PD	$	20.36	100-2100-520800
GF-UNL REG 86/87 OC-PD	$	19.49	100-2100-520800
GF-FUEL ADJUSTMENT-PD	$	28.55	100-2100-520800
GF-UA GASOLINE-PD	$	17.02	100-2100-520800
GF-CAR WASH-PD	$	4.00	100-2100-532700
GF-NOTARY RENEWAL-PD	$	10.00	100-2100-530800
GF-UNL REG 86/87 OC-PD	$	19.15	100-2100-520800
GF-UNL REG 86/87 OC-PD	$	30.50	100-2100-520800
GF-ZIPPERED DUFFLE BAG-PD	$	35.98	100-2100-520100
GF-SURFACE DISFENCTANT-PD	$	13.27	100-2100-520100
GF-VICKERS SLING-PD	$	499.50	100-2100-531070
GF-SWIVEL BUSHNELL-PD	$	39.89	100-2100-520100
GF-AIR FORCE CAP-PD	$	57.99	100-2100-532800
GF-RDS FOR DUTY PISTOLS TOVES-PD	$	350.00	100-2100-532800
GF-UNL REG 86/87 OC-PD	$	29.50	100-2100-520800
GF-OTHER MISCELLANEOUS TRANS	$	99.99	100-110150
GF-OTHER MISCELLANEOUS TRANS	$	99.99	100-110150
GF-MISC OTHER	$	6.17	100-110150
GF-OTHER MISCELLANEOUS TRANS	$	12.00	100-110150
GF-OTHER MISCELLANEOUS TRANS	$	6.50	100-110150
GF-OTHER MISCELLANEOUS TRANS	$	10.00	100-110150
GF-UNL REG 86/87 OC-PD	$	50.00	100-2100-520800
GF-XTRA WIDE METAL LOCKER-PD	$	986.00	100-2100-520100
GF-ENGRAVING SERVICES-PD	$	126.83	100-2100-553800
GF-COMMENDATION BARS-PD	$	303.43	100-2100-533100
GF-TRANSUNION CHECKS-PD	$	134.10	100-2100-530600
GF-UNL REG 86/87 OC-PD	$	62.20	100-2100-520800

GF-PRORATED CHARGE FOR PLAN 4-PD	$	53.44	100-2100-530600
GF-PRORATED CHARGE FOR PLAN 4-CITY ADM	$	53.44	100-1100-530600
GF-UA GASOLINE-PD	$	36.31	100-2100-520800
GF-UA GASOLINE-PD	$	41.14	100-2100-520800
GF-UNL REG 86/87 OC-PD	$	37.38	100-2100-520800
GF-UA GASOLINE-PD	$	17.48	100-2100-520800
GF-UNL REG 86/87 OC-PD	$	17.50	100-2100-520800
GF-UA GASOLINE-PD	$	13.13	100-2100-520800
GF-UA GASOLINE-PD	$	13.90	100-2100-520800
GF-UA GASOLINE-PD	$	25.12	100-2100-520800
GF-UNL REG 86/87 OC-PD	$	27.95	100-2100-520800
GF-UNL REG 86/87 OC-PD	$	20.77	100-2100-520800
GF-UNL REG 86/87 OC-PD	$	16.00	100-2100-520800
GF-UA GASOLINE-PD	$	15.25	100-2100-520800
GF-UA GASOLINE-PD	$	16.00	100-2100-520800
GF-UA GASOLINE-PD	$	10.00	100-2100-520800
GF-UNL REG 86/87 OC-PD	$	30.50	100-2100-520800
GF-UA GASOLINE-PD	$	28.00	100-2100-520800
GF-UNL REG 86/87 OC-PD	$	27.00	100-2100-520800
GF-UNL REG 86/87 OC-PD	$	39.00	100-2100-520800
GF-UA GASOLINE-PD	$	34.28	100-2100-520800
GF-UA GASOLINE-PD	$	19.48	100-2100-520800
GF-UA GASOLINE-PD	$	27.64	100-2100-520800
GF-NLEFIA RENEWAL-PD	$	50.00	100-2100-530800
GF-UNL REG 86/87 OC-PD	$	17.64	100-2100-520800
GF-UA GASOLINE-PD	$	13.34	100-2100-520800
GF-UNL REG 86/87 OC-PD	$	31.68	100-2100-520800
GF-UNL REG 86/87 OC-PD	$	10.63	100-2100-520800
GF-UA GASOLINE-PD	$	27.94	100-2100-520800
GF-UNL REG 86/87 OC-PD	$	9.00	100-2100-520800
GF-UA GASOLINE-PD	$	9.05	100-2100-520800
GF-UNL REG 86/87 OC-PD	$	14.57	100-2100-520800
GF-UNL REG 86/87 OC-PD	$	33.81	100-2100-520800
GF-UNL REG 86/87 OC-PD	$	32.30	100-2100-520800
GF-NOTARY SUPPLIES-PD	$	41.49	100-2100-531100
GF-UNL REG 86/87 OC-PD	$	31.17	100-2100-520800
GF-UNL REG 86/87 OC-PD	$	33.56	100-2100-520800
	$	**5,406.65**	
GF-OTHER MISCELLANEOUS TRANS-PLAN	$	975.00	100-4100-533000

GF-TERRA FLEX ADVANCED-PLAN	$	400.00	100-4100-530800
GF-ISB COOKIES-PLAN	$	5.00	100-4100-533000
GF-AIRLINE FARE-PLAN	$	154.40	100-4100-533000
GF-ISB DESSERT VARIETY CAKES-PLAN	$	5.00	100-4100-550300
GF-UA ISB SNACKS-PLAN	$	4.49	100-4100-550300
GF-VEGETABLE TRAYS VEGETABLES-PLAN	$	16.99	100-4100-550300
GF-GRAB AND GO FRESH FRUIT CO-PLAN	$	7.99	100-4100-550300
	$	**1,568.87**	
	$	28,496.91	

RECORD OF PROCEEDINGS
FORT LUPTON CITY COUNCIL/ENTERPRISE BOARDS
March 17, 2020

The City Council of the City of Fort Lupton met in a regular session at the City Complex, 130 South McKinley Avenue, the regular meeting place of the City Council, on Tuesday, March 17, 2020. Mayor Zo Stieber called the meeting to order at 7:07 p.m. and invited everyone to join her in the Pledge of Allegiance.

ROLL CALL

Mari Peña, City Clerk, called the roll. Those present were Mayor Zo Stieber, Council Members, Shannon Rhoda, Chris Ceretto, David Crespin, and Michael Sanchez. Councilmember Bruce Fitzgerald appeared by phone.

Also present were City Administrator, Chris Cross, City Clerk, Mari Peña, and Planning Director, Todd Hodges.

The following staff appeared by phone: Assistant City Administrator, Glenda Aretxuloeta, Public Works Director, Roy Vestal, Chief John Fryar, City Attorney, Andy Ausmus and Finance Director, Leann Perino.

PERSONS TO ADDRESS COUNCIL

There was no one from the public to address the Council.

APPROVAL OF AGENDA

It was moved by Chris Ceretto and seconded by Michael Sanchez to approve the Agenda as presented. Staff to add item 'a' under Action Memorandum - AM 2020-070 An Order of the Mayor of the City of Fort Lupton, Colorado Declaring a Local Disaster Emergency and a Resolution of the City Council of the City of Fort Lupton Consenting to Such Declaration. Motion passed unanimously on voice vote.

POINT OF PRIVILEDGE

Mayor Stieber stated a Point of Privilege regarding the Covid-19 respiratory pandemic and encouraged ever resident to take the time to acquaint themselves with extra sanitation procedures and limit the time spent with people with whom they are not familiar.

REVIEW OF ACCOUNTS PAYABLES

Council reviewed the March 17, 2020 payables; there were no questions or comments.

CONSENT AGENDA

It was moved by David Crespin and seconded by Michael Sanchez to approve the Consent Agenda as presented with the following items: 03032020 City Council Meeting Minutes, Second Reading Ordinance 2020-1078 AN ORDINANCE OF THE CITY COUNCIL OF FORT

DRAFT

LUPTON ACCEPTING THE TEN EYCK AND CAMPBELL PUBLIC RIGHT OF WAY DEDICATION FOR COUNTY ROAD 24, Second Reading Ordinance 2020-1079 AN ORDINANCE OF THE CITY OF FORT LUPTON, COLORADO, AMENDING CHAPTER 10, ARTICLE XII MISCELLANEOUS OFFENSE, SECTION 10-264 FIREWORKS PROHIBITED OF THE FORT LUPTON MUNICIPAL CODE, Approve Estimated 2020 Windy Gap Assessment For An Amount Not To Exceed $207,073.48 To Be Paid Out Of The Utility Fund (AM 2020-062), Approve 2020 Fulton Irrigation Ditch Company Assessment From The Utility Enterprise Fund For An Amount Not To Exceed $12,090.40 (AM 2020-063), Approving a Resolution 2020R033 A RESOLUTION OF THE CITY COUNCIL OF FORT LUPTON RATIFYING THE MAYOR'S APPOINTMENT OF THE ATTACHED LIST OF CANDIDATES (EXHIBIT "A") TO THE CORRESPONDING ADVISORY COMMITTEES FOR A TERM BEGINNING MARCH 17, 2020 AND ENDING DECEMBER 31, 2021 (AM 2020-069). Motion passed unanimously on roll call vote.

Mayor Stieber stated that all votes will be held by roll call due to phone participation by Councilmembers.

ACTION MEMORANDUM

AM 2020-070 An Order 0f The Mayor Of The City Of Fort Lupton, Colorado Declaring A Local Disaster Emergency And A Resolution Of The City Council Of The City Of Fort Lupton Consenting To Such Declaration

On March 10, 2020, the Governor of the State of Colorado recognized the COVID-19 pandemic and declared a state of emergency. The Mayor is authorized, pursuant to Colorado Disaster Emergency Act, C.R.S. § 24-33.5-701, et seq., (the "Act"), to declare a local emergency. Pursuant to C.R.S. §24-33.5-709, the declaration activates the response and recovery aspects of any applicable disaster emergency plans an authorized the furnishing of aid and assistance under such plans. The emergency conditions caused by the COVID-19 pandemic, as defined by C.R.S. § 24-33.5-702, persist and require additional and sustained action by the City

It was moved by Michael Sanchez and seconded by Chris Ceretto to approve Resolution 2020R032 AN ORDER OF THE MAYOR OF THE CITY OF FORT LUPTON, COLORADO DECLARING A LOCAL DISASTER EMERGENCY AND A RESOLUTION OF THE CITY COUNCIL OF THE CITY OF FORT LUPTON CONSENTING TO SUCH DECLARATION. Motion passed unanimously on roll call vote.

AM 2020-061 Approve A Resolution Accepting An Annexation Petition For The Morrison Annexation Submitted By Andrew Morrison And Kamber Morrison And To Set A Public Hearing Date For May 5, 2020

Andrew Morrison and Kamber Morrison, the applicants, have submitted an annexation petition to initiate annexation proceedings for one parcel of land. The parcel is located west and adjacent to County Road 29 right of way and approximately 0.25 miles north from County Road 8. This

proposed annexation, known as the Morrison Annexation, consists of a total of 37.58 more or less. The initiating resolution is the first step in the annexation process and is to accept the annexation petition and initiate review process. This will set the hearing before Council to May 5, 2020.

It was moved by Chris Ceretto and seconded by David Crespin to approve Resolution 2020R034 A RESOLUTION OF THE CITY COUNCIL OF FORT LUPTON INITIATING ANNEXATION PROCEEDINGS FOR THE ANNEXATION KNOWN AS THE MORRISON ANNEXATION AND SETTING THE PUBLIC HEARING FOR MAY 5, 2020. Motion passed unanimously on roll call vote.

AM 2020-064 Approve A Resolution Adopting A New Purchasing Policy Effective March 17, 2020 And Declaring All Previous Policies Would Not Be In Effect

Staff has reviewed the purchasing policy, which was last updated in 2015 and determined updated purchasing limits will aid staff in purchasing necessary supplies and materials in a timely and more efficient manner in order to complete job related tasks. The purchasing permissions levels for staff have also been modified to add supervisors and managers to the department head level. This is a level of management did not exist when previous purchasing policy updates occurred.

The local preference for purchasing has been changed to remove the preference when State and Federal funding is being used to pay for a project. State and Federal Grants policies specifically prohibit local purchasing preferences.

It was moved by Chris Ceretto and seconded by Michael Sanchez to approve Resolution 2020R035 A RESOLUTION OF THE CITY COUNCIL OF THE CITY OF FORT LUPTON ADOPTING THE PURCHASING POLICIES AND PROCEDURES. Motion passed unanimously on roll call vote.

AM 2020-065 Approving An Intergovernmental Agreement To Participate In Weld County's Designation Of An Urban County Municipality That May Be Able To Seek Funds Through The Allocation Of Community Development Block Grants (CDBG) From The US Department Of Housing And Urban Development

Weld County is seeking the designation of an Urban County through the U.S. Department of Housing and Urban Development (HUD). If the County qualifies, the County will be eligible to receive an allocation of Community Development Block Grant (CDBG) funds. The goal of the CDBG program at the Weld County level is to provide funds for decent housing and suitable living environments, along with economic opportunities, principally for low- and moderate income persons.

The local Weld County program will exempt the City of Fort Lupton from applying for funding from the State of Colorado CDBG as well as preclude the City from participating in other HOME or ESG consortiums. While the City would be exempt from these programs through the State of Colorado, they will automatically be included in these programs through Weld County.

DRAFT

It was moved by Michael Sanchez and seconded by David Crespin to approve the Intergovernmental Agreement to participate in Weld County's Designation of an Urban County Municipality that may be able to seek funds through the Allocation of Community Block Grants (CDBG) from the US Department of Housing and Urban Development. Motion passed unanimously on roll call vote.

Councilmember Tommy Holton joined the meeting by phone at 7:22 p.m. however the connection was lost at 7:22 p.m. Councilmember Holton did not vote on AM 2020-065.

AM 2020-066 Approving Payment To Axon Enterprise, Inc. For Annual Payment For Body And In-Car Camera System Purchase, Maintenance And Data Storage For 2020

The payment for annual payment for in-car cameras and storage is $11,507.32 and adding two in-car units and storage ($3,258.00) and adding two body units, storage and additional license totaling $18,719.05 for the calendar year 2020.

Mayor Stieber verified and asked Councilmember Holton if he was on the phone and able to hear the entire presentation. Councilmember Holton answered yes and that he heard the entire presentation. Mayor Stieber asked City Attorney, Andy Ausmus, if Tommy Holton was eligible to register his vote for this action item. Mr. Ausmus stated yes.

It was moved by David Crespin and seconded by Michael Sanchez to approve payment to Axon Enterprise, Inc. for annual payment for body and in-car camera system purchase, maintenance and data storage for 2020. Motion passed unanimously on roll call vote.

AM 2020-067 Approve A Resolution Accepting A Final PUD Plat, Known As The North Land PUD Third Filing

Prior to the start of this item Todd Hodges, conferenced in by phone, Lloyd Land and Vern Burke, the applicants for Land 5 Investments.

The applicant, Land 5 Investments, LLC, has resubmitted a final PUD plat, known as the North Land PUD Third Filing for the City Council's consideration. The Subdivision is located south and adjacent to County Road 18, and east and adjacent to the Union Pacific Railroad right-of-way. This third filing constitutes the northern most portion of the North Land PUD, which was annexed as the North Land Annexation No. 3 in 2009, and zoned PUD in 2011. The plat is meant to replace the previously approved North Land PUD Third Filing, which was brought before City Council on March 18, 2019.

The subdivision is 110.55 acres, more or less, and will subdivide the property into ten PUD lots for industrial uses. The lots range from 4 to 15 acres, and there is approximately 7 acres of new road and utility right of way being dedicated. This includes the extension of North Land Drive up to County Road 18.

DRAFT

RECORD OF PROCEEDINGS
FORT LUPTON CITY COUNCIL/ENTERPRISE BOARDS
March 17, 2020

It was moved by David Crespin and seconded by Bruce Fitzgerald to approve Resolution 2020R036 A RESOLUTION OF THE CITY COUNCIL OF FORT LUPTON APPROVING A FINAL PUD PLAT, KNOWN AS THE NORTH LAND PUD THIRD FILING. Motion passed unanimously on roll call vote.

Although both Lloyd Land and Vern Burke were conferenced in, they didn't speak, Todd ended call after approval of the Resolution.

AM 2020-068 Award Contract To Colorado Paving Inc. For $370,000 For The 2019 Street Project From Public Works-Street Sales Tax Fund And Storm Drainage Fund

Bid documents were advertised from January 17, 2020 with bid opening on February 28, 2020. Four bids were received with Colorado Paving, Inc. providing the low bid as shown in the attached Bid Tabulation. Anticipated project start end of April with substantial completion in June, 2020. Contracted cost includes approximately 10% contingency ($33,448.28) line item added after the bids.

FUNDING	***Costs***	***Budgeted***
Street Sales Tax (7th St)	*$ 121,161.05*	*$ 190,000.00*
Street Sales Tax (Greenwood Ct.)	*$ 195,770.67*	*$ 140,000.00*
Storm Drainage Fund (7thSt)	*$ 19,620.00*	*$ 25,000.00*
Contingency	*$ 33,448.28*	
TOTAL FUNDS	***$ 370,000.00***	***$ 355,000.00***

Council discussed the 10%contingency that would take the item over-budget. Roy Vestal stated that funding from the other project that won't be done or savings from other projects.

The Public Works Director, Roy Vestal stated that he received information today indicating that the company can bond themselves and received approval of the bond.

It was moved by David Crespin and seconded by Tommy Holton to award the contract to Colorado Paving Inc for $370,000 for the 2019 Street Project from Public Works-Street Sales Tax Fund and Storm Drainage Fund. Motion passed unanimously on roll call vote.

STAFF REPORTS

Chris Cross provided information regarding City operations and content on the City's web page for building and department closures. He also added that due to the pandemic, there would be no Utility shut offs and late fees would be waived. This item will continue to be monitored.

Mari Peña stated that City Hall doors were closed however entry to the building is through the police department doors. Nathalia has been instrumental in taking utility payments through the court window.

DRAFT

RECORD OF PROCEEDINGS
FORT LUPTON CITY COUNCIL/ENTERPRISE BOARDS
March 17, 2020

Todd Hodges stated that public hearings were postponed until further review of the City's procedures.

Andy Ausmus stated that an emergency ordinance would be brought before council outlining future electronic meetings. All hearing should be forwarded to after April 8, 2020 until review of the ordinance and approval.

The Council directed to staff to make the necessary accommodations to proceed with hearings.

Andy Ausmus stated that Jeanelle Anderson has done a great with notification of court cancellations. Today she was able to contact over 70 people. They have worked together to place procedures for future court dates. He also noted that Nathalia was able to help with court and is doing a wonderful job. Mari Peña has been pulling together emergency ordinances and guidelines for meetings.

Roy Vestal provided an update on public works with regard to staffing.

MAYOR/COUNCIL REPORTS

Chris Ceretto asked about court dates and asked that a program be put in place to take online court payments.

Andy Ausmus answered that the next court date is scheduled for May 5th.

FUTURE CITY EVENTS

March 31st	Town Hall Meeting, 6:30 p.m. at 130 S. McKinley Ave.
April 7th	City Council Meeting, 7:00 p.m. at 130 S. McKinley Ave.
April 4th -	Easter Egg Hunt, 10 a.m. **Cancelled** Fort Lupton Recreation Center, 203 S. Harrison Ave.
April 13th	Hillside Cemetery Clean Up, 13750 County Road 12 (all week)
April 14th	Town Hall Meeting, 6:30 p.m. at 130 S. McKinley Ave.
April 20th	Shredding Day, 8 a.m. – 10 a.m., 130 S. McKinley Ave.
April 21st	City Council Meeting, 7:00 p.m. at 130 S. McKinley Ave.
April 23 – 24th	Clean-Up Day for Senior/Disabled Curbside Pick Up

DRAFT

April 25th	Clean-Up Day, 8 a.m. – Noon, Public Works Shop, 800 12th St.
April 25th	Fort Lupton Annual Vaccination Clinic, 9 a.m. - 1 p.m. Fort Lupton Veterinary Hospital, 1025 1st St.

It was visually noted that Councilmember David Crespin left the meeting at 7:45 p.m.

ADJOURNMENT

Mayor Stieber adjourned the meeting at 7:46 p.m.

Respectfully Submitted,

_____
Maricela Peña, City Clerk

Approved by City Council

_____
Zo Stieber, Mayor

DRAFT

ORDINANCE NO. 2020-1080

INTRODUCED BY: TOMMY HOLTON

AN ORDINANCE OF THE CITY OF FORT LUPTON, COLORADO, AMENDING CHAPTER 2, ARTICLE VIII, SECTION 2-182, MEMBERSHIP; APPOINTMENT; TERMS, OF THE FORT LUPTON MUNICIPAL CODE

INTRODUCED, READ, AND PASSED ON FIRST READING, AND ORDERED PUBLISHED this 3rd day of March 2020.

PUBLISHED in the Fort Lupton Press the 11th day of March 2020.

FINALLY READ BY TITLE ONLY, PASSED AND ORDERED FINALLY PUBLISHED BY TITLE ONLY this 7th day of April 2020.

PUBLISHED BY TITLE ONLY the 15th day of April 2020.

EFFECTIVE (after publication) the 15th day of May 2020.

CITY OF FORT LUPTON, COLORADO

_____

Zo Stieber, Mayor

ATTEST:

_____

Maricela Peña, City Clerk

Approved as to form:

_____

Andy Ausmus, City Attorney

ORDINANCE NO. 2020-1081

INTRODUCED BY: CHRIS CERETTO

AN ORDINANCE OF THE CITY OF FORT LUPTON, COLORADO, AMENDING CHAPTER 16, ARTICLE I, SECTION 16-11, BOARD OF ADJUSTMENT, OF THE FORT LUPTON MUNICIPAL CODE

NOW THEREFORE, BE IT ORDAINED BY THE CITY COUNCIL OF THE CITY OF FORT LUPTON, COLORADO, AS FOLLOWS:

INTRODUCED, READ, AND PASSED ON FIRST READING, AND ORDERED PUBLISHED this 3rd day of March 2020.

PUBLISHED in the Fort Lupton Press the 11th day of March 2020.

FINALLY READ BY TITLE ONLY, PASSED AND ORDERED FINALLY PUBLISHED by title only this 7th day of April 2020.

PUBLISHED BY TITLE ONLY the 15th day of April 2020.

EFFECTIVE (after publication) the 15th day of May 2020.

CITY OF FORT LUPTON, COLORADO

_____

Zo Stieber, Mayor

ATTEST:

_____

Maricela Peña, City Clerk

Approved as to form:

_____

Andy Ausmus, City Attorney

CITY OF
Fort Lupton
EST 1836
COME PAINT YOUR FUTURE WITH US

To: City Council
From: Alyssa Knutson, Planner
CC: Todd Hodges, Planning Director
Date: April 7, 2020
Subject: Continuance Request for the Murata Farms Sketch PUD Plat

Staff is requesting an extension of the scheduled public hearing for the Murata Farms Sketch PUD Plat. This request is so that staff can establish a method and procedure for conducting public hearings virtually.

Staff recommends that the hearing be rescheduled for the following date:

- City Council: Tuesday, April 21, 2020 at 7:00 PM

The Planning Commission hearing for this matter has already been rescheduled from Thursday March 26, 2020 at 6:00 PM to Thursday, April 9, 2020 at 6:00 PM.

CITY OF
Fort Lupton
EST 1836
COME PAINT YOUR FUTURE WITH US

To: City Council
From: Alyssa Knutson, Planner
CC: Todd Hodges, Planning Director
Date: April 7, 2020
Subject: Continuance Request for the Conner Family Trust – Fort Lupton Fire Protection District Minor Subdivision

Staff is requesting an extension of the scheduled public hearing for the Conner Family Trust – Fort Lupton Fire Protection District Minor Subdivision. This request is so that staff can establish a method and procedure for conducting public hearings virtually.

Staff recommends that the hearing be rescheduled for the following date:

- City Council: Tuesday, April 21, 2020 at 7:00 PM

The Planning Commission hearing for this matter has already been rescheduled from Thursday March 26, 2020 at 6:00 PM to Thursday, April 9, 2020 at 6:00 PM.

CITY OF FORT LUPTON
CITY COUNCIL

Zo Stieber, Mayor

Shannon Rhoda, Ward 1
Chris Ceretto, Ward 2
Mike Sanchez, Ward 3

David Crespin, Ward 1
Tommy Holton, Ward 2
Bruce Fitzgerald, Ward 3

CITY OF Fort Lupton EST 1836

COME PAINT YOUR FUTURE WITH US

AM 2020-071

APPROVING A RESOLUTION DECLARING THE CITY OF FORT LUPTON A 'SECOND AMENDMENT SANCTUARY CITY"

I. Agenda Date: Council Meeting – April 7, 2020

II. Attachments: a. Proposed Resolution

III. Summary Statement:

The Second Amendment to the United States Constitution, adopted in 1791 as part of the Bill of Rights, protects the inalienable and individual right of the people to keep and bear arms. Declaring the City of Fort Lupton as a Sanctuary City will allow the City to protect its Citizens' inalienable and individual right to keep and bear arms.

IV. Submitted by: _____
Zo Stieber, Mayor

V. Finance Reviewed _____
Finance Director

VI. Approved for Presentation: _____
City Administrator

VII. Attorney Reviewed _____ Approved _____ Pending Approval

VIII. Certification of Council Approval: _____ _____
City Clerk Date

IX. Detail of Issue/Request:

The Second Amendment to the United States Constitution, adopted in 1791 as part of the Bill of Rights, protects the inalienable and individual right of the people to keep and bear arms. Declaring the City of Fort Lupton as a Sanctuary City will allow the City to protect its Citizens' inalienable and individual right to keep and bear arms.

As stated in Article II of the Colorado Constitution:
Section 3 provides that all "persons have certain inalienable rights, among which may be reckoned the right of enjoying and defending their lives and liberties; of acquiring, possessing and protecting property: and of seeking and obtaining their safety and happiness.

Section 13 provides that the "right of no person to keep and bear arms in defense of his home, person and property, or in aid of the civil power when thereto legally summoned, shall be called in question.

Section 11 provides that no "ex post facto law, nor law impairing the obligation of contracts, or retrospective in its operation…shall be passed by the general assembly,"

Section 7 provides that the "people shall be secure in their persons, papers, homes and effects, from unreasonable searches and seizures,"

Section 15 provides that "[P]rivate property shall not be taken or damaged, for public or private use, without just compensation," which the Colorado Supreme Court has indicated includes a legal interference with the physical use, possession, disposition, or enjoyment of the property, including temporarily.

X. Legal/Political Considerations:

XI. Alternatives/Options:

N/A

XII. Financial Considerations:

N/A

XIII. Staff Recommendation:

Staff seeks direction.

RESOLUTION NO. 2020Rxxx

A RESOLUTION OF THE CITY COUNCIL OF FORT LUPTON DECLARING THE CITY OF FORT LUPTON A "SECOND AMENDMENT SANCTUARY CITY"

WHEREAS, the City Council of Fort Lupton, Colorado, pursuant to Colorado statute is vested with the authority of administering the affairs of Fort Lupton, Colorado, and

WHEREAS, the Second Amendment to the United States Constitution, adopted in 1791 as part of the Bill of Rights, protects the inalienable and individual right of the people to keep and bear arms, and,

WHEREAS, the United States Supreme Court in *District of Columbia v. Heller,* 554 U.S. 570 (2008), affirmed an individual's right to possess firearms, unconnected with service in a militia, for traditionally lawful purposes, such as self-defense within the home, and,

WHEREAS, the United States Supreme Court in *McDonald v. Chicago,* 561 U.S. 742 (2010), affirmed that the right of an individual to "keep and bear arms," as protected under the Second Amendment, in incorporated by the Due Process Clause of the Fourteenth Amendment against the states, and,

WHEREAS, the United State Supreme Court in *United States v. Miller,* 307 U.S. 174 (1939), opined that firearms that are part of ordinary military equipment, or with use that could contribute to the common defense, are protected by the Second Amendment, and,

WHEREAS, Article II, Section 3 of the Colorado Constitution provides that all "persons have certain inalienable rights, among which may be reckoned the right of enjoying and defending their lives and liberties; of acquiring, possessing and protecting property: and of seeking and obtaining their safety and happiness," and,

WHEREAS, Article II, Section 13 of the Colorado Constitution provides that the "right of no person to keep and bear arms in defense of his home, person and property, or in aid of the civil power when thereto legally summoned, shall be called in question," and,

WHEREAS, Article II, Section 11 of the Colorado Constitution provides that no "ex post facto law, nor law impairing the obligation of contracts, or retrospective in its operation…shall be passed by the general assembly," and,

WHEREAS, Article II, Section 7 of the Colorado Constitution provides that the "people shall be secure in their persons, papers, homes and effects, from unreasonable searches and seizures," and,

WHEREAS, Article II, Section 15 of the Colorado Constitution provides that "[P]rivate property shall not be taken or damaged, for public or private use, without just compensation,"

which the Colorado Supreme Court has indicated includes a legal interference with the physical use, possession, disposition, or enjoyment of the property, including temporarily, and,

WHEREAS, it is the desire of the Council to declare its support of the Second Amendment to the United States Constitution and to the provisions of the Colorado Constitution which protect Fort Lupton Citizens' inalienable and individual right to keep and bear arms, and,

WHEREAS, the Council each took an oath to support and defend the United States Constitution, the Colorado Constitution, and the laws of the State of Colorado which are not deemed unconstitutional by a court of competent jurisdiction

NOW THEREFORE BE IT RESOLVED by the City Council of Fort Lupton be, and hereby is, declared to be a "Second Amendment Sanctuary City."

BE IT FURTHER RESOLVED that the Council affirms its support for the Chief of Police and the Weld County Sheriff in the exercise of their sound discretion to not enforce against any citizen an unconstitutional firearms law.

BE IT FURTHER RESOLVED that the Council will not appropriate funds for capital construction of building space and purchase of storage systems to store weapons seized pursuant to the authority and requirements set forth in House Bill 19-1177, if such bill is enacted by the Colorado General Assembly, and/or for the purpose of enforcing any other law that unconstitutionally infringes upon the right of the people of the City of Fort Lupton to keep and bear arms.

APPROVED AND PASSED BY A MAJORITY VOTE OF THOSE ELECTED TO THE CITY COUNCIL OF THE CITY OF FORT LUPTON, COLORADO THIS 7th DAY OF APRIL 2020.

City of Fort Lupton, Colorado

_____

Zo Stieber, Mayor

Attest:

_____

Maricela Peña, City Clerk

Approved as to form:

_____

Andy Ausmus, City Attorney

CITY OF FORT LUPTON
CITY COUNCIL

CITY OF Fort Lupton EST 1836

COME PAINT YOUR FUTURE WITH US

Zo Stieber, Mayor

Shannon Rhoda, Ward 1
Chris Ceretto, Ward 2
Mike Sanchez, Ward 3

David Crespin, Ward 1
Tommy Holton, Ward 2
Bruce Fitzgerald, Ward 3

AM 2020-072

AN EMERGENCY ORDINANCE ENACTING SECTION 2-34 EMERGENCY OR DISASTER DECLARED, SECTION 2-35 ELECTRONIC MEETINGS, SECTION 2-36 EMERGENCY MEETINGS, SECTION 2-37 EFFECT ON EXISTING LAWS OF THE FORT LUPTON MUNICIPAL CODE AND DECLARING AN EMERGENCY

I. Agenda Date: Council Meeting – April 7, 2020

II. Attachments: a. Proposed Ordinance

III. Summary Statement:

The City currently doesn't have any ordinance for electronic communications during declared disaster emergencies. This Ordinance will establish guidelines to ensure that City business can be conducted and all residents can be represented by their elected officials during a declared emergency or disaster without endangering public health, including the health of the public, the City Council, and City staff and the community at large, while retaining a maximum of transparency, openness, and public participation consistent with the Code and the Colorado Open Meetings Law

---

IV. Submitted by: Maricela Pena, City Clerk

V. Finance Reviewed _____
Finance Director

VI. Approved for Presentation: _____
City Administrator

VII. Attorney Reviewed _____ Approved _____ Pending Approval

VIII. Certification of Council Approval: _____ City Clerk _____ Date

IX. Detail of Issue/Request:

During a declared Emergency or Disaster in the City relating to an epidemic or other incident where the nature of the physical environment presents a risk to public health, as a result of the Emergency or Disaster, conducting public meetings in the physical presence of the public is dangerous and requiring the physical attendance of City Council and City staff is impractical, imprudent, and dangerous to the public health

Conducting meetings in a manner that provides either telephonic or video access to the discussion of public business and formal actions and the ability to comment in writing or by other means and, in emergency situations, allows for emergency meetings with more limited public access to take action that may be ratified at a future public meeting, provides for meetings that are open to the public and a reasonable opportunity to be heard, consistent with the Code and the Colorado Open Meetings Law.

X. Legal/Political Considerations:

The City Attorney has reviewed the proposed Ordinance.

XI. Alternatives/Options:

1. Adopt the Emergency Ordinance.
2. Do not Adopt the Emergency Ordinance.

XII. Financial Considerations:

N/A

XIII. Staff Recommendation:

Staff seeks approval of the Ordinance.

ORDINANCE NO. 2020-10xx

INTRODUCED BY: xx

AN EMERGENCY ORDINANCE OF THE CITY COUNCIL OF THE CITY OF FORT LUPTON, COLORADO ENACTING CHAPTER 2, ADMINISTRATION AND PERSONNEL, ARTICLE II MAYOR AND CITY COUNCIL, SECTION 2-34 EMERGENCY OR DISASTER DECLARED, SECTION 2-35 ELECTRONIC MEETINGS, SECTION 2-36 EMERGENCY MEETINGS, SECTION 2-37 EFFECT ON EXISTING LAWS OF THE FORT LUPTON MUNICIPAL CODE AND DECLARING AN EMERGENCY.

BE IT ORDAINED BY THE CITY COUNCIL OF THE CITY OF FORT LUPTON, COLORADO:

WHEREAS, the Governor of the State of Colorado has issued Executive Order D 2020 003, declaring a Disaster Emergency Due to the Presence of Coronavirus Disease 2019 in Colorado and the City has declared a local disaster emergency due to the presence of COVID-19;

WHEREAS, the presence of COVID-19, and manner in which it is communicated, and in light of the incubation period during which symptoms may not be apparent, continues to pose a threat to the public health and welfare and numerous governmental entities across the state of Colorado have cancelled or restricted public gatherings to reduce the spread of COVID-19;

WHEREAS, pursuant to the Fort Lupton Municipal Code ("Code"), the City Council of the City of Fort Lupton ("City") has all legislative powers and functions of municipal government as reserved to it by the Colorado Constitution and the laws of the state of Colorado;

WHEREAS, the Code allows the City Council to determine rules and regulations for citizens to be heard; and

WHEREAS, C.R.S. 24-6-402(2)(b) requires that "all meetings of a quorum of three or more members of any local public body, whichever is fewer, at which any public business is discussed or at which any formal action may be taken are declared to be public meetings open to the public at all times," but does not define the phrase "open to the public" or mandate the physical presence of the public or members of the local public body;

WHEREAS, the existence of a disaster or emergency – including an epidemic - as defined by the Colorado Disaster Emergency Act, C.R.S. §§ 24-33.5-701 et seq., as amended ("Disaster" or "Emergency"), presents a situation in which public notice, and likewise, a public forum, would be either impractical or impossible and may present a danger to public health;

WHEREAS, the City Council desires to establish guidelines to ensure that City business can be conducted and all residents can be represented by their elected officials during a declared emergency or disaster without endangering public health, including the health of the public, the

City Council, and City staff and the community at large, while retaining a maximum of transparency, openness, and public participation consistent with the Code and the Colorado Open Meetings Law;

NOW THEREFORE, BE IT ORDAINED BY THE CITY COUNCIL OF THE CITY OF FORT LUPTON, COLORADO:

Section 1. Chapter 2, Article II, Section 2-34, of the Fort Lupton Municipal Code shall be enacted to read as follows:

Sec. 2-34 Emergency or Disaster Declared.

(a.) During a declared Emergency or Disaster in the City relating to an epidemic or other incident where the nature of the physical environment presents a risk to public health, as a result of the Emergency or Disaster, conducting public meetings in the physical presence of the public dangerous and requiring the physical attendance of City Council and City staff is impractical, imprudent, and dangerous to the public health;

(b) Conducting meetings in a manner that provides either telephonic or video access to the discussion of public business and formal actions and the ability to comment in writing or by other means and, in emergency situations, allows for emergency meetings with more limited public access to take action that may be ratified at a future public meeting, provides for meetings that are open to the public and a reasonable opportunity to be heard, consistent with the Code and the Colorado Open Meetings Law.

Section 2. Chapter 2, Article II, Section 2-35, of the Fort Lupton Municipal Code shall be enacted to read as follows:

Sec. 2-35 Electronic Meetings.

(a) During a declared Emergency or Disaster in the City relating to an epidemic or other incident where the nature of the physical environment presents a risk to public health, as a result of the Emergency or Disaster, the City Administrator is authorized to schedule City Council meetings as electronic meetings if the capacity for such meetings is available, subject to the provisions of this section, including any meeting held at the City Hall, or other location where any or all of the members of the City Council are present.

(b) All City Council members shall be allowed to attend and participate in City Council meetings by such telephonic, video conferencing, or other electronic means as are made available by the City Administrator that allow for real-time participation and visibility (audio or video) by the public ("Electronic Means"), as provided herein. Councilmembers may, if permitted by the City Administrator, participate in such meetings from the regular meeting location.

(c) Electronic Means, except where not consistent with the Colorado Open Meetings Law, shall include telephone, video, or web-based conferencing means made available by the City Administrator that:

(1) Allows all councilmembers and City staff to see (to the extent possible), hear and communicate with each other, the City Administrator, the City Clerk, and the City Attorney;

(2) Allows the public to hear and view, if the meeting is visible and the person has adequate technological connection, the meeting, public statements by councilmembers and staff, voting, and materials presented to councilmembers; and

(3) Allows for oral public comment, to the extent possible, and written public comment (including before a meeting) that can be visible to the public and City Council as would be allowed by applicable council policies, subject to the limitations of this ordinance and as determined by the Mayor to preserve the orderly conduct of the meeting – provided written public comment shall be entered into the record but may be relied upon by any councilmember.

(d) During a meeting held pursuant to this ordinance, members of the public shall not be entitled or permitted to be present in the physical location where the meeting occurs.

(e) During a meeting held pursuant to this ordinance, Councilmembers shall not engage in any discussions of the business unless such discussions are visible to the public through Electronic Means, except for executive sessions.

(f) All votes shall be conducted by a roll call vote that discloses the identity of the person voting and that person's vote.

(g) All electronic meetings conducted pursuant to this ordinance shall be recorded.

(h) Minutes of the meeting shall be taken and promptly prepared for review and approval by the City Council at the next regular or special meeting;

(i) A quorum may be established by the attendance of councilmembers through Electronic Means.

(j) Executive sessions and study sessions may be conducted by Electronic Means if held in accordance with the Colorado Open Meetings Law and City policies applicable to such meetings. Public comment shall not be required during such meetings and confidentiality of executive sessions shall be maintained.

(k) Limitations:

(1) If any Councilmember's ability to participate by Electronic Means is disconnected or delayed, the City Council may elect to proceed with the meeting provided a quorum remains present.

(2) No public hearings on quasi-judicial matters and no votes taking quasi-judicial actions shall be taken during an emergency meeting, as defined below, or electronic meeting unless the City Council adopts a resolution establishing guidelines for such matters, consistent with this ordinance and in conformance with the requirements of the Code and the requirements of due process.

(l). In the discretion of the City Administrator and subject to the availability of resources, boards and commissions; enterprise boards and the Fort Lupton Urban Renewal Authority may conduct meetings through electronic meetings pursuant to this ordinance.

Section 3. Chapter 2, Article II, Section 2-36, of the Fort Lupton Municipal Code shall be enacted to read as follows:

Sec. 2-36. Emergency Meetings.

In case of an emergency requiring immediate action of the City Council to protect public health, safety or welfare, the City Council may convene an emergency meeting without any advance public notice or with such limited advance public notice as the Mayor finds feasible in the circumstances. Such meetings may be held pursuant to this ordinance. At such emergency meeting, the City Council may take any action within its authority that is necessary for the immediate protection of public health, safety or welfare; provided however, that any action taken at the emergency meeting shall be effective only until the next meeting that complies with the advance notice requirements of the Colorado Open Meetings Law. At that next meeting, the City Council may ratify any action taken at the emergency meeting. The agenda and posted public notice for that next meeting shall include the question of ratifying such emergency action. If the City Council fails to ratify any such emergency action taken, that action shall be deemed rescinded but shall remain effective for the period of time from its approval until its rescission.

Section 4. Chapter 2, Article II, Section 2-37, of the Fort Lupton Municipal Code shall be enacted to read as follows:

Sec. 2-37 Effect on existing laws.

All ordinances, resolutions, and policies of the City that are inconsistent with this ordinance are superseded by this ordinance to the extent of such inconsistency.

EMERGENCY CLAUSE. Pursuant to C.R.S. §31-16-105 the City of Fort Lupton hereby finds, determines and declares that this Ordinance is necessary for the immediate preservation of public health and safety of the City. Therefore, this Ordinance shall become immediately effective upon adoption on second reading by the City Council.

INTRODUCED, READ, PASSED, AND ADOPTED this 7th day of April 2020.

PUBLISHED in the Fort Lupton Press the 15th day of April 2020.

CITY OF FORT LUPTON

_____

Zo Stieber, Mayor

ATTEST:

_____

Maricela Peña, City Clerk

Approved as to Form:

_____

Andy Ausmus, City Attorney

CITY OF FORT LUPTON
CITY COUNCIL

Zo Stieber, Mayor

Shannon Rhoda, Ward 1
Chris Ceretto, Ward 2
Mike Sanchez, Ward 3

David Crespin, Ward 1
Tommy Holton, Ward 2
Bruce Fitzgerald, Ward 3

CITY OF Fort Lupton EST 1836

COME PAINT YOUR FUTURE WITH US

AM 2020-073

ESTABLISHING A POLICY FOR CITY COUNCIL MEETING SPECIAL PROCEDURES DURING DECLARED EMERGENCIES

I. Agenda Date: Council Meeting – April 7, 2020

II. Attachments:
a. Proposed Resolution
b. Special meeting Procedures During Declared Emergencies

III. Summary Statement:

The City currently doesn't have any policy regarding electronic meeting procedures during declared disaster emergencies. This Policy shall only be in effect upon a declaration of emergency or disaster pursuant to as set forth in the Fort Lupton Municipal Code and Colorado law.

IV. Submitted by: _____
Andy Ausmus, City Attorney

V. Finance Reviewed _____
Finance Director

VI. Approved for Presentation: _____
City Administrator

VII. Attorney Reviewed _____ Approved _____ Pending Approval

VIII. Certification of Council Approval: _____ _____
City Clerk Date

IX. Detail of Issue/Request:

The City currently doesn't have any policy regarding electronic meeting procedures during declared disaster emergencies. This Policy shall only be in effect upon a declaration of emergency or disaster pursuant to as set forth in the Fort Lupton Municipal Code and Colorado law.

The intent and purpose of this Policy and Procedures is to ensure that the City is innovative in providing the public the most meaningful access possible in light of the current emergency challenges present as a result of Covid-19. Therefore, subject to social distancing and public health orders, members of the public will be offered both the opportunity to be physically and or electronically present for meetings at the City, subject to existing health conditions.

X. Legal/Political Considerations:

None.

XI. Alternatives/Options:

None.

XII. Financial Considerations:

N/A

XIII. Staff Recommendation:

Staff seeks approval.

RESOLUTION NO. 2020Rxxx

A RESOLUTION OF THE CITY COUNCIL OF FORT LUPTON, APPROVING AND ADOPTING CITY COUNCIL MEETING SPECIAL PROCEDURES DURING DECLARED EMERGENCIES

WHERAS, on March 10, 2020, the Governor of the State of Colorado declared a state of epidemic disaster emergency on Colorado, on March 11, 2020, the World Health Organization declared a global pandemic, and on March 13, 2020 the United States of America declared a National Emergency due to the spread of COVID-19; and

WHEREAS, according to the Centers for Disease Control and Prevention, one of the ways in which COVID-19 most quickly spreads is through personal contact, including contact that occurs when large numbers of people congregate in enclosed spaces, which is an occurrence at City Council meetings for the City of Fort Lupton; and

WHEREAS, in order to minimize personal contact of the City Council and the members of the public and preserve the health, safety and welfare of the citizens of the City of Fort Lupton in times of Emergency, as declared by the City of Fort Lupton, the City Council hereby it in the best interest to adopt a policy permitting City Councilmembers to participate and be present at City Council meetings via electronic means in times of emergency.

WHEREAS, pursuant to CRS 24-33.5-709, the declaration activates the response and recovery aspects of any applicable disaster emergency plans and authorized the furnishing of aid and assistance under such plans; and

NOW THEREFORE BE IT RESOLVED that the Fort Lupton City Council, hereby approves and adopts the City Council Meeting Special Procedures During Declared Emergencies Policy.

APPROVED AND PASSED BY A MAJORITY VOTE OF THOSE ELECTED TO THE CITY COUNCIL OF THE CITY OF FORT LUPTON, COLORADO THIS 7th DAY OF APRIL 2020.

City of Fort Lupton, Colorado

_____

Zo Stieber, Mayor

Attest:

_____

Maricela Peña, City Clerk

Approved as to form:

_____

Andy Ausmus, City Attorney

CITY COUNCIL MEETING SPECIAL PROCEDURES DURING DECLARED EMERGENCIES

Resolution 2020Rxxx, Adopted April 7, 2020

I. Application.

This Policy shall only be in effect upon a declaration of emergency or disaster pursuant to as set forth in the Fort Lupton Municipal Code and Colorado law. The City Administrator has the authority to establish, regulate, and enforce any additional procedures necessary to implement this Policy. The City Administrator's Office shall provide technological support for the remote connection and the implementation of this Policy. Except as modified by this Policy, City Council meetings shall adhere to the provisions of the Fort Lupton Municipal Code.

This Policy shall apply to meetings of the Fort Lupton City Council, planning commission, and enterprise board meetings during the period of the declared emergency.

The intent and purpose of this Policy and Procedures is to ensure that the City is innovative in providing the public the most meaningful access possible in light of the current emergency challenges present as a result of Covid-19. Therefore, subject to social distancing and public health orders, members of the public will be offered both the opportunity to be physically and or electronically present for meetings at the City, subject to existing health conditions.

II. Definitions.

Connected Meetings means Meetings where all public, staff, and members of City Council participate by accessing a commonly linked platform remotely via telephonic, video, and/or internet facilitation.

Electronic Participation means participation in which one or more members of City Council may participate in Meetings by telephone or other electronic means of participation, such as video conferencing.

Quasi-Judicial means a determination of the rights, duties, or obligations of specific individuals on the basis of the application of presently existing legal standards or policy considerations to past or present facts developed at a hearing conducted for the purpose of resolving the particular interests in question. It is defined as quasi-judicial because it bears similarities to the adjudicatory function performed by courts. If a governmental decision is likely to adversely affect the protected interests of specific individuals, and if a decision is to be reached through the application of preexisting legal standards or policy considerations to present or past facts presented to the governmental body, then the governmental body is acting in a quasi-judicial capacity in making the determination.

Meetings means regular and special meetings as well as executive and study sessions.

III. Purpose.

The purpose of this Policy is to specify the circumstances under which

(i) A member of the City Council may attend a Meeting by Electronic Participation, and
(ii) Meetings that may be conducted as Connected Meetings.

IV. Term of Policy.

This Policy shall be in effect from when the City declares a local disaster emergency thru when the local disaster emergency declaration has been rescinded.

V. Electronic Participation in Meetings.

Electronic Participation shall be made available to members of City Council and shall be limited as follows:

1. A member of City Council may listen by telephone or other electronic means to any Council meeting. Such member of City Council listening via telephone shall be deemed present for purposes of determining a quorum.

2. The member of City Council may not participate nor vote in a quasi-judicial public hearing; however, the member of City Council may maintain the electronic connection and monitor and listen to the hearing and may participate and vote in legislative matters.

3. The City Council may discontinue the use of Electronic Participation by one or more members during a Meeting where the participation results in delays or interference in the Meeting process; e.g., where the telephone connection or connection by other electronic means is repeatedly lost, the quality of the connection is unduly noisy or otherwise problematic to the conduct of the meeting, or the listening member is unable to hear speakers using a normal speaking voice amplified to a level suitable for the meeting audience in attendance. The Meeting may proceed after the Electronic Participation is discontinued only if there is a quorum.

VI. Arranging for Electronic Participation.

To arrange to participate via Electronic Participation, a member of City Council shall:

1. Contact the City Administrator in advance of the Meeting to determine if an arrangement for such participation via telephone conference or video conference is possible. Members of City Council shall endeavor to advise the City of their intent to participate via Electronic Participation at the earliest possible time and not less than twenty-four (24) hours prior to the requested participation.

2. The City shall initiate the Electronic Participation not more than ten (10) minutes prior to the scheduled time of the meeting. Upon disconnection during a meeting, the City Clerk shall make one attempt to re-initiate the connection.

VII. Connected Meetings

Connected Meetings may be conducted if all of the following conditions are met:

1. The City Administrator determines that meeting in person is not practical or prudent, because of a health pandemic or declaration of emergency affecting the City;

2. All members of City Council can hear one another or otherwise communicate with one another and can hear or read all discussion and testimony in a manner designed to provide maximum notice and participation;

3. Members of the public participating in the Connected Meeting can hear or read all discussion, testimony and votes, unless not feasible due to the pandemic or emergency;

4. All votes are conducted by roll call;

5. Minutes of the meeting are taken and promptly recorded, and such records are open to public inspection; and

6. To the extent possible, full and timely notice is given to the public setting forth the time of the meeting and the protocol for public participation in the Connected Meeting.

7. No quasi-judicial matters will be heard or considered at a Connected Meeting unless the Applicant consents to proceeding in a Connected Meeting, executes the City's standard waiver and suitable arrangements can be made for public comment and involvement.

VIII. Reasonable Accommodations.

The City shall provide reasonable accommodation and shall waive or modify provisions of this Policy to provide a member of the City Council with a disability full and equal access to Meetings. The City shall otherwise adhere to federal and state law requirements to the extent feasible during a pandemic or emergency.

IX. Malfunction.

In the event of an electronic malfunction during the Connected Meeting of a nature that the remote attendees cannot effectively participate, at the direction of the Mayor or other presiding officer, the connection may be terminated.

X. Executive Sessions.

Confidentiality: It shall be the responsibility of the member of City Council utilizing this policy to initiate the connection at a secure location such that the confidentiality of the executive session is not compromised. Remote attendees shall not record the executive session.

XI. Emergency Meetings.

In case of an emergency requiring immediate action of the City Council to protect public health, safety or welfare, or in the case that a health pandemic or declared state of emergency has been declared, the City Council may convene an emergency Connected Meeting without any advance public notice or with such limited advance public notice as the Mayor finds feasible in the circumstances. Such meetings may be held pursuant to this policy. At such emergency meeting, the City Council may take any action within its authority that is necessary for the immediate protection of public health, safety or welfare; provided however, that any action taken at the emergency meeting shall be effective only until the next meeting that complies with the advance notice requirements of the Colorado Open Meetings Law. At that next meeting, the City Council may ratify any action taken at the emergency meeting. The agenda and posted public notice for that next meeting shall include the question of ratifying such emergency action. If the City Council fails to ratify any such emergency action taken, that action shall be deemed rescinded but shall remain effective for the period of time from its approval until its rescission.

WAIVER BY APPLICANT

This WAIVER is executed by _____(hereinafter "APPLICANT").

WHEREAS, Applicant has a plan, submittal or application pending before the Fort Lupton Planning Commission or the Fort Lupton City Council;

WHEREAS, the President of the United States, the Governor of the State of Colorado and the Mayor of Fort Lupton have declared a state of emergency exists due to the Covid-19 health pandemic which makes in-person public hearings problematic;

WHEREAS, in order to continue forward with consideration of the plan, submittal or application by the Fort Lupton Planning Commission or the Fort Lupton City Council, the Applicant has agreed to waive the right to an in person public hearing, and waived the right to continue its in-person hearing until a later date after the state of emergency has been rescinded, and has consented to proceed in a Connected Meeting, utilizing acceptable and available technology to make its presentation to the applicable governing bodies and any public that chooses to participate;

WHEREAS, the Applicant agrees as follows:

1. **WAIVER.** Applicant understands and acknowledges that it has the right to a full, in person public hearing so that the Fort Lupton staff, Planning Commission and or City Council shall have the ability to adequately consider Applicant's presentation. Applicant also acknowledges that it has the right to continue the scheduled public hearing until such time as the Covid-19 state of emergency has been rescinded by the federal, state and local governments.

Applicant has been advised to seek legal counsel prior to execution of this Waiver.

With full knowledge and understanding of these rights, Applicant has voluntarily decided to proceed with a Connected Meeting before the Fort Lupton Planning Commission and or Fort Lupton City Council and waives the right to an in-person public hearing and waives the right to continue the in-person public hearing.

2. **AMENDMENT/NO ASSIGNMENT.** No modification or amendment of this waiver shall be valid and Applicant cannot assign this Waiver to any third party. This Waiver shall be binding upon the successors, assigns, shareholders, members, managers, employees, consultants and subcontractors of Applicant.

3. **COMPLETE WAIVER.** This Waiver encompasses the entirety of Applicant's submittal. In the event of an unsuccessful decision by any governing body, Applicant understands this document is a complete waiver of any claim that any such negative decision was based upon lack of public hearings or presentations.

4. **SEVERABILITY.** In the event any portion of this Waiver is held to be unenforceable, the unenforceable portion of this Waiver will be deleted and the remaining provisions of the Waiver shall continue in full force and effect.

5. **GOVERNING LAW.** This Waiver shall be governed by the laws of the State of Colorado. Any action to contest the validity or enforceability of this Waiver shall be filed in Weld County Court.

6. **NO WAIVER OF GOVERNMENTAL IMMUNITY.** The Applicant acknowledges and agrees that the City, its elected officials, officers and employees are relying upon, and do not waive or intend to waive by any provision of this Waiver, the monetary limitations or any other rights, immunities and protections provided by the Colorado Governmental Immunity Act, C.R.S. Sec. 24-10-101 et seq. as amended or otherwise available to the City. Nothing herein shall operate as a waiver of any right the City has of governmental immunity under Colorado law which is specifically herein reserved.

7. **INDEMNIFICATION BY APPLICANT.** Applicant shall defend, indemnify and hold the City harmless from any damages associated with Applicant agreeing to proceed with a Connected Meeting in lieu of an in person public hearing.

8. **ACCEPTANCE REQUIRED.** This Waiver is subject to the final acceptance of the Fort Lupton Planning Commission and or City Council. Further, Applicant acknowledges that if the Covid-19 pandemic results in a Connected Meeting not being able to be held, then the only alternative shall be re-scheduling of said hearing until such time as the health, safety and welfare of the participants may be preserved.

EXECUTED THIS _____ DAY OF _____, 2020.

WAIVER RECEIVED BY: CITY OF FORT LUPTON, COLORADO

_____

BY:_____

TITLE:_____

APPLICANT:

_____

BY:_____

TITLE:_____

2

CITY OF FORT LUPTON
CITY COUNCIL

CITY OF Fort Lupton EST 1836

COME PAINT YOUR FUTURE WITH US

Zo Stieber, Mayor

Shannon Rhoda, Ward 1
Chris Ceretto, Ward 2
Michael Sanchez, Ward 3

David Crespin, Ward 1
Tommy Holton, Ward 2
Bruce Fitzgerald, Ward 3

AM 2020-074

POLICE EQUIPMENT PURCHASE/INSTALLATION FOR FOUR (4) PATROL VEHICLES FOR A TOTAL OF $91,555.68 ALLOCATED FROM THE GENERAL FUND

I. **Agenda Date:** Council Meeting – April 7, 2020

II. **Attachments:** Bid Worksheets

III. **Summary Statement:**

This AM is for the purchase and installation of police equipment by BEARCOM for four (4) police patrol vehicles totaling $76,699.68 and $14,856.00 to Tyler Technologies for four (4) E-ticket writers, printers and service agreement. This is a total of $91,555.68.

IV. **Submitted by:** _____
Chief of Police

V. **Finance Reviewed** _____
Finance Director

VI. **Approved for Presentation:** _____
City Administrator

VII. **Attorney Reviewed** _____ Approved _____ Pending Approval

VIII. **Certification of Council Approval:** _____ _____
City Clerk Date

IX. Detail of Issue/Request:

- Bids were received from BEARCOM (formerly Wireless Advanced Communications (WAC), AV Tech and MHQ (of Albuquerque) for the police vehicle specific equipment and installation.
- The AM includes both police equipment and installation and purchase of Eticket writers, printers and service agreements on those units.
- Recommend the approval of BEARCOM for equipment purchase and installation and Tyler Technologies for Eticket writers.

X. Legal/Political Considerations:

Not Applicable

XI. Alternatives/Options:

1. None

XII. Financial Considerations:

The General Fund has $245,800 budgeted for purchasing and equipping for four patrol vehicles. The total of the vehicles and equipment is $225,416.68 plus Tyler of $14,856. Overall total is $240,272.68.

XIII. Staff Recommendation:

Approval.

BEARCOM Always On

TAHOE

UPDATED 3/9/2020

Customer: FORT LUPTON CITY GOVERNMENT
Purchase Order # #:

Customer #: 1747990
Sales Rep: Brian Fields

Quote #: 605
Delivery Due Date:

Ship-to Address:
FORT LUPTON CITY GOVERNMENT
130 S. MCKINLEY AVE
FORT LUPTON, CO 80621
United States

Bill-to Address:
FORT LUPTON CITY GOVERNMENT
130 S. MCKINLEY AVE
FORT LUPTON, CO 80621
United States

Item	Item Description	Qty	Price	Total
Tahoe 2018				
SHIP	SHIPPING AND HANDLING	17	$10.00	$170.00
ILABOR	INSTALL LABOR	26	$100.00	$2,600.00
FH12	ATC FUSE HOLDER	1	$4.00	$4.00
PNFLBSPLT1	Y SPLITTER CABLE, SOUNDOFF	1	$15.00	$15.00
SC-1902	MOMENTARY PUSHBUTTON SWITCH	3	$8.00	$24.00
BK2044TAH15	PB450L4 - SOUNDOFF NFORCE TAH	1	$975.00	$975.00
	2 FORWARD FACING LIGHTS AND 1 EACH SIDE LIGHTS			
911008-6	CONNECTOR TO CONNECTOR 6 FT EX	4	$15.00	$60.00
911022	Under Hood, Gold, Tahoe	1	$65.00	$65.00
9005_MICRO	MICRO LED HEADLIGHT 5K/6K 9005	1	$130.00	$130.00
	LED HIGH BEAM REPLACEMENTS FLASH IN CODE			
002BR415	Chevy-Tahoe 2015	2	$10.50	$21.00
BRKT-RRM-12	Lightbar Extension Plate	2	$26.00	$52.00
EMPLBLS148-2	48in. 10-16V MPOWER LED RWAB D	1	$2,107.00	$2,107.00
	THIN MOUNT ***PREMIUM 48" ROOF MOUNT LIGHTBAR MPOWE SOUNDOFF RED/WHITE DRIVER FRONT AND ENDS--BLUE/WHITE PASSENGER FRONT AND ENDS-- WHITE OVERRIDES AS SCENE RED/AMBER DRIVER REAR HALF--BLUE/AMBER PASSENGER REAR HALF--AMBER OVERRIDES AS ARROW			
911008-19	CONNECTOR TO CONNECTOR 19 FT E	1	$19.00	$19.00
911027	Rear Hatch Harness (3 pin), Ch	1	$6.00	$6.00
ENFWBRF-C03-2	nForce Interior Rear Shroud Du	1	$827.00	$827.00
	VEHICLE SPECIFIC REAR INTERIOR SHROUD LIGHT LIFTS WITH HATCH RED/AMBER DRIVER HALF--BLUE/AMBER PASSENGER HALF AMBER OVERRIDES AS ARROW AND MATCHES ROOF LIGHTBAR			
911019	Tail Light Harness, Gold, Taho	1	$102.00	$102.00
911001	BLACKOUT MODULE	1	$129.00	$129.00
VLR_6_WC	VLR-6 RESISTOR WATERPROOF CONN	4	$11.00	$44.00
911015	Harness, Rear Node to Blackout	1	$20.00	$20.00
ENGND04101	EVCS Remote Node	3	$170.00	$510.00
V6_HW	V6 TRITON BASE ADAPTOR	4	$5.00	$20.00
V6_BULB_R	V6 TRITON RED BULB ONLY	4	$59.00	$236.00
	LED BRAKE REPLACEMENT BULBS FLASH IN CODE			
EMPS2STS4D	mPOWER Stud Mount Surface R/W	1	$99.00	$99.00
	HATCH BOTTOM EDGE LIGHTS FACE REAR WHEN HATCH IS OPEN			
EMPS2STS4E	mPOWER Stud Mount Surface B/W	1	$99.00	$99.00
	HATCH BOTTOM EDGE LIGHTS FACE REAR WHEN HATCH IS OPEN			
ETSS100N	100N Series Spkr w/ Uni Bail B	1	$162.00	$162.00

BEARCOM Always On

Customer: FORT LUPTON CITY GOVERNMENT
Purchase Order # #:

Customer #: 1747990
Sales Rep: Brian Fields

Quote #: 605
Delivery Due Date:

Ship-to Address:
FORT LUPTON CITY GOVERNMENT
130 S. MCKINLEY AVE
FORT LUPTON, CO 80621
United States

Bill-to Address:
FORT LUPTON CITY GOVERNMENT
130 S. MCKINLEY AVE
FORT LUPTON, CO 80621
United States

Item	Item Description	Qty	Price	Total
	SINGLE SIREN SPEAKER			
ENGSA07141	480 SIREN BLUEPRINT CNTRL, SIN	1	$275.00	$275.00
	SINGLE SIREN AMPLIFIER AND POWER DISTRIBUTION			
BRKT-SRN-3	Bracket, Siren Speaker	1	$40.00	$40.00
ENGCC01243	EVCS Central Controller v. 3	1	$325.00	$325.00
6006B	Switch Battery M ON/OFF w/Knob	1	$21.00	$21.00
BRKT-SRN-14	Bracket, Node/Siren	1	$15.00	$15.00
M24040	USB Type A to Type B Jumper Ca	1	$5.00	$5.00
M05290-03	Cat 5e UTP Patch Black 3ft.	1	$5.00	$5.00
911024	Input Harness, Chevy Tahoe	1	$21.00	$21.00
911013	Harness, Central Breakout	1	$43.00	$43.00
ENGLNK004	blueLINK OBD, various Chevrole	1	$240.00	$240.00
911066	Central Controller Aux Plug Ha	1	$29.00	$29.00
911056	Power Harness - Tahoe	1	$155.00	$155.00
911067	CIG PLUG HARNESS	3	$13.00	$39.00
ENGCP18001	EVCS Remote Control Panel	1	$150.00	$150.00
HLN9073	MOT MIC HANG UP CLIP	1	$2.00	$2.00
901-0129A	LT7600 Contour Console, 2015 T	1	$277.00	$277.00
	POLICE CONSOLE https://www.dandrelectronics.com/901-0129a.html SIDE POCKET, ARM RESTS, COMPUTER MOUNT OPTIONAL			
02.0457	FP - Dual Outlet and GM USB/AU	1	$0.00	$0.00
C-ARM-105	CON,ACSY,ARM,SDMT,LPD,FLP,H-AD	1	$131.00	$131.00
CA-0107LS	DUAL CUP HOLDER W/ PME SMALL 9	1	$32.00	$32.00
CA-0103	12 VOLT TRIPLE OUTLET MOUNTS	1	$30.00	$30.00
911068	Y Adapter	2	$15.00	$30.00
CA-0130	DARTA 18in. WHITE/RED LED MAP	1	$72.00	$72.00
	RED/WHITE GOOSENECK MAPLIGHT MOUNTING LOCATION TO BE DETERMINED			
17040	Magnetic Micr System	2	$42.00	$84.00
	MAGNETIC MIC CLIPS			
02.0334	F/P MOTOROLA XTL 5000 REMOTE	1	$0.00	$0.00
02.0358	FACE PLATE FOR REMOTE HEAD SOU	1	$0.00	$0.00
02.SP3.5	3.5 in. SPACER PLATE F/P	1	$0.00	$0.00
ECVDMLTAL00	Universal LED Dome Light - 6in	1	$41.00	$41.00
	OVERHEAD RED/WHITE OFFICER CAB DOME LIGHT			
C-HDM-204	POLE,TELE,HDM,SDMT,8h,W-SHRTHN	1	$132.00	$132.00
	COMPUTER POST MOUNT TO PASSENGER SIDE OF CONSOLE			
C-MD-112	ACTADP, HDM, SLIDE, TS, SP,	1	$245.00	$245.00
	COMPUTER MOTION DEVICE MOUNT TO COMPUTER DOCK AND POST			
DS-PAN-111	DEVMT,DOCKST,PAN,30,	1	$619.00	$619.00
	NEW CF-31 PANASONIC COMPUTER DOCK			
PK0355TAH15	#10VS RECESSED PANEL COATED PO	1	$697.00	$697.00

BEARCOM Always On

Customer: FORT LUPTON CITY GOVERNMENT
Purchase Order # #:

Customer #: 1747990
Sales Rep: Brian Fields

Quote #: 605
Delivery Due Date:

Ship-to Address:
FORT LUPTON CITY GOVERNMENT
130 S. MCKINLEY AVE
FORT LUPTON, CO 80621
United States

Bill-to Address:
FORT LUPTON CITY GOVERNMENT
130 S. MCKINLEY AVE
FORT LUPTON, CO 80621
United States

Item	Item Description	Qty	Price	Total
	FULL WIDTH PRISONER CAGE CENTER RECESS PANEL TO MOUNT GUNS UP FRONT AND SLIDING WINDOW			
QK0566TAH15	#12 Poly w/Replacement Seat 15	1	$1,069.00	$1,069.00
	REAR REPLACEMENT PRISONER SEAT WITH OUTSIDE SEAT BELTS (RETRACTOR IN CENTER) SO NOT TO REACH ACROSS PRISONER			
WK0595TAH15	Window Barrier VS Poly	1	$229.00	$229.00
	POLY (PLEXIGLASS)PRISONER WINDOW BARS			
M09400RCL	Red LED Mini Marker Light, Cle	1	$10.00	$10.00
	RED PRISONER LIGHT CONTROLLED BY DOOR AND LIGHT/SIREN CTRL			
BRKT-CAG-1	Bracket, Prisoner Light	1	$13.00	$13.00
911008-8	CONNECTOR TO CONNECTOR 8 FT EX	1	$16.00	$16.00
NMOKHFUD	TES 0-6000MHZ,3/4 MOUNT	1	$17.90	$17.90
RFU-600-1	TES RFI MIN-UHF MALE CRIMP CON	1	$2.17	$2.17
PCTCN7080	TES 760-870 1/4 WAVE ANTENNA	1	$10.00	$10.00
HKN6188	MOT CABLE, POWER AND SPEAKER	1	$30.00	$30.00
HKN6169	MOT REMOTE MOUNT CABLE, 5M/17'	1	$62.00	$62.00
HKN4192	MOT SPECTRA 20 MBL PWR CABLE	1	$38.00	$38.00
292-522	VISATON FRS8-4 3.3in. SPEAKERS	1	$17.00	$17.00
292-526	VISATON GRILL FOR FRS8 SERIES	1	$7.00	$7.00
DSR-2X	2 DIRECTIONAL RADAR	1	$3,030.00	$3,030.00
	NEW STALKER RADAR DSR-2X			
155-2211-00	CABLE, REMOTE DISPLAY	1	$79.00	$79.00
047-0545-00	Mounting Bracket, Antenna	1	$9.00	$9.00
BRKT-RAD-8	KIT, ft.15 FORD SUV KA DISPLAY	1	$31.25	$31.25
BRKT-RAD-19	KNUCKLE, LG ALUMINUM COMPONENT	2	$12.00	$24.00
BRKT-RAD-20	KNUCKLE, THREADED COMPONENT	2	$15.00	$30.00
BRKT-RAD-16	2015 TAHOE KA ANTENNA MNT KIT	1	$13.75	$13.75
BRKT-RAD-17	2015 TAHOE COUNTING UNIT MNT K	1	$14.50	$14.50
BRKT-RAD-26	Rear Antenna Mount, Chevy Taho	1	$12.00	$12.00
WEI-009	Frame w/ Plates to Mnt Handcuf	1	$180.00	$180.00
	GUN RAIL ATTACH TO CAGE THEN ATTACH LOCKS TO RAIL			
SC-6_HXL	ELECTRIC W/HANDCUFF KEY, EXTRA	2	$132.00	$264.00
	ELECTRONIC HANDCUFF STYLE LOCKS ATTACH TO GUN RAIL ON CAGE			
911062	Ignition/Idle System, Chevy 15	1	$39.00	$39.00
	ENGINE IDLE SYSTEM RUNS WITH KEY OUT OF IGNITION			
75899	Stinger DS HPL 12V DC (NiMH)	1	$131.00	$131.00
	FLASHLIGHT MOUNTING LOCATION TO BE DETERMINED			
911014	Harness, Front Node to Dist	2	$54.00	$108.00
911016	DISTRIBUTION MODULE	4	$41.00	$164.00
BRKT-CIR-18	Bracket, Node/Siren	1	$5.00	$5.00
BRKT-CIR-19	Bracket, Node/Siren	1	$14.00	$14.00

BEARCOM Always On

Customer: FORT LUPTON CITY GOVERNMENT
Purchase Order # #:

Customer #: 1747990
Sales Rep: Brian Fields

Quote #: 605
Delivery Due Date:

Ship-to Address:
FORT LUPTON CITY GOVERNMENT
130 S. MCKINLEY AVE
FORT LUPTON, CO 80621
United States

Bill-to Address:
FORT LUPTON CITY GOVERNMENT
130 S. MCKINLEY AVE
FORT LUPTON, CO 80621
United States

Item	Item Description	Qty	Price	Total
ELUC3H010E	LED INSERT BLUE/WHITE BLUE/WHITE LED REVERSE REPLACEMENTS FLASH IN CODE	2	$70.00	$140.00
LPS-104	PWRSPLY,EM,120W,CABLE,3ft.I,OU COMPUTER POWER SUPPLY	1	$157.00	$157.00
CPE	CUSTOMER PROVIDED EQUIPMENT MOTOROLA 2 PIECE RADIO COMPUTER MODEM WITH ANTENNA COMPUTER (CF-31) FACTORY SPOTLIGHTS	1	$0.00	$0.00
MISC	MISC TK0247TAH15 TRAY FLAT TOP WITH ANCHORS BOTTOM DRAWER NO LOCK	1	$785.00	$785.00
TPA9289	CARGO RADIO TRAY - TRN	1	$300.00	$300.00
SHIP	SHIPPING AND HANDLING	1	$100.00	$100.00

This quote is valid until: 4/3/2020

Total: $19,402.57

56 207.71

John Fryar
3/26/20

BEARCOM Always On

FORD

UPDATED 3/9/2020

Customer: FORT LUPTON CITY GOVERNMENT
Purchase Order # #:

Customer #: 1747990
Sales Rep: Brian Fields

Quote #: 603
Delivery Due Date:

Ship-to Address:
FORT LUPTON CITY GOVERNMENT
130 S. MCKINLEY AVE
FORT LUPTON, CO 80621
United States

Bill-to Address:
FORT LUPTON CITY GOVERNMENT
130 S. MCKINLEY AVE
FORT LUPTON, CO 80621
United States

Item	Item Description	Qty	Price	Total
Utility 2018				
SHIP	SHIPPING AND HANDLING	13	$10.00	$130.00
SC-1902	MOMENTARY PUSHBUTTON SWITCH	3	$8.00	$24.00
ILABOR	INSTALL LABOR	25	$100.00	$2,500.00
BRKT-RRD-10	Bracket, Hatch Door High	2	$15.00	$30.00
911008-19	CONNECTOR TO CONNECTOR 19 FT E	1	$19.00	$19.00
911008-14	CONNECTOR TO CONNECTOR 14 FT E	1	$17.00	$17.00
911008-5	CONNECTOR TO CONNECTOR 5 FT EX	2	$15.00	$30.00
FH12	ATC FUSE HOLDER	1	$4.00	$4.00
911008-7	CONNECTOR TO CONNECTOR 7 FT EX	4	$15.00	$60.00
911008-8	CONNECTOR TO CONNECTOR 8 FT EX	2	$16.00	$32.00
911020	Under Hood, Gold, Utility	1	$82.80	$82.80
911008-6	CONNECTOR TO CONNECTOR 6 FT EX	1	$15.00	$15.00
002BR304	UTILITY BRACKET FOR NFORCE LIG	2	$10.50	$21.00
EMPLBLS148-2	48in. 10-16V MPOWER LED RWAB D	1	$2,107.00	$2,107.00
	THIN MOUNT ***PREMIUM 48" ROOF MOUNT LIGHTBAR MPOWE SOUNDOFF RED/WHITE DRIVER FRONT AND ENDS--BLUE/WHITE PASSENGER FRONT AND ENDS-- WHITE OVERRIDES AS SCENE RED/AMBER DRIVER REAR HALF--BLUE/AMBER PASSENGER REAR HALF--AMBER OVERRIDES AS ARROW			
EMPS2STS4D	mPOWER Stud Mount Surface R/W	1	$99.00	$99.00
	HATCH BOTTOM EDGE LIGHTS FACE REAR WHEN HATCH IS OPEN			
EMPS2STS4E	mPOWER Stud Mount Surface B/W	1	$99.00	$99.00
	HATCH BOTTOM EDGE LIGHTS FACE REAR WHEN HATCH IS OPEN			
ELUC3H010B	LED INSERT BLUE	3	$70.00	$210.00
	2 REVERSE BLUE LED FLASH AGAINST FACTORY BRAKE AND REVERSE 1 PASSENGER HEADLIGHT BLUE CORNER LED INSERT			
911007	Tail Light Harness, Silver/Gol	1	$80.00	$80.00
911001	BLACKOUT MODULE	1	$129.00	$129.00
7443-WHP28-T	Dual Function 28 SMD LED Cool	2	$29.00	$58.00
	REVERSE LED REPLACEMENT BULBS			
911015	Harness, Rear Node to Blackout	1	$20.00	$20.00
ENGND04101	EVCS Remote Node	3	$170.00	$510.00
ETSS100N	100N Series Spkr w/ Uni Bail B	1	$162.00	$162.00
	SINGLE SIREN SPEAKER			
ENGSA07141	480 SIREN BLUEPRINT CNTRL, SIN	1	$275.00	$275.00
	SINGLE SIREN AMPLIFIER AND POWER DISTRIBUTION			
ENGCC01243	EVCS Central Controller v. 3	1	$325.00	$325.00
6006B	Switch Battery M ON/OFF w/Knob	1	$21.00	$21.00
M24040	USB Type A to Type B Jumper Ca	1	$5.00	$5.00
M05290-03	Cat 5e UTP Patch Black 3ft.	1	$5.00	$5.00

BEARCOM Always On

Customer: FORT LUPTON CITY GOVERNMENT
Purchase Order # #:

Customer #: 1747990
Sales Rep: Brian Fields

Quote #: 603
Delivery Due Date:

Ship-to Address:
FORT LUPTON CITY GOVERNMENT
130 S. MCKINLEY AVE
FORT LUPTON, CO 80621
United States

Bill-to Address:
FORT LUPTON CITY GOVERNMENT
130 S. MCKINLEY AVE
FORT LUPTON, CO 80621
United States

Item	Item Description	Qty	Price	Total
911006	Input Harness, Ford Utility/ S	1	$23.00	$23.00
911016	DISTRIBUTION MODULE	8	$41.00	$328.00
911013	Harness, Central Breakout	2	$43.00	$86.00
911054	Power Harness - Utility	1	$154.00	$154.00
ENGLNK002	blueLINK OBD, various Ford mod	1	$240.00	$240.00
911066	Central Controller Aux Plug Ha	1	$29.00	$29.00
ENGCP18001	EVCS Remote Control Panel	1	$150.00	$150.00
	STANDARD BLUEPRINT LIGHT&SIREN CONTROL PANEL			
HLN9073	MOT MIC HANG UP CLIP	1	$2.00	$2.00
M09400RCL	Red LED Mini Marker Light, Cle	1	$10.00	$10.00
	RED PRISONER LIGHT CONTROLLED BY DOOR AND LIGHT/SIREN CTRL			
BRKT-CAG-1	Bracket, Prisoner Light	1	$13.00	$13.00
911008-9	CONNECTOR TO CONNECTOR 9 FT EX	1	$16.00	$16.00
NMOKHFUD	TES 0-6000MHZ,3/4 MOUNT	1	$17.90	$17.90
RFU-600-1	TES RFI MIN-UHF MALE CRIMP CON	1	$2.17	$2.17
PCTCN7080	TES 760-870 1/4 WAVE ANTENNA	1	$10.00	$10.00
HKN6188	MOT CABLE, POWER AND SPEAKER	1	$30.00	$30.00
HKN6169	MOT REMOTE MOUNT CABLE, 5M/17'	1	$62.00	$62.00
HKN4192	MOT SPECTRA 20 MBL PWR CABLE	1	$38.00	$38.00
292-522	VISATON FRS8-4 3.3in. SPEAKERS	1	$17.00	$17.00
292-526	VISATON GRILL FOR FRS8 SERIES	1	$7.00	$7.00
DSR-2X	2 DIRECTIONAL RADAR	1	$3,030.00	$3,030.00
	NEW STALKER RADAR DSR-2X			
155-2211-00	CABLE, REMOTE DISPLAY	1	$79.00	$79.00
047-0545-00	Mounting Bracket, Antenna	1	$9.00	$9.00
BRKT-RAD-21	A-PILLAR BRACKET, INT SUV	1	$37.50	$37.50
BRKT-RAD-8	KIT, ft.15 FORD SUV KA DISPLAY	1	$31.25	$31.25
BRKT-RAD-22	KIT, ft.15 FORD SUV FRONT DASH	1	$20.35	$20.35
BRKT-RAD-20	KNUCKLE, THREADED COMPONENT	2	$15.00	$30.00
BRKT-RAD-19	KNUCKLE, LG ALUMINUM COMPONENT	2	$12.00	$24.00
WEI-009	Frame w/ Plates to Mnt Handcuf	1	$180.00	$180.00
	GUN RAIL ATTACH TO CAGE THEN ATTACH LOCKS TO RAIL			
911068	Y Adapter	1	$15.00	$15.00
SC-6_HXL	ELECTRIC W/HANDCUFF KEY, EXTRA	2	$132.00	$264.00
	ELECTRONIC HANDCUFF LOCKS ATTACH TO GUN RAIL ON CAGE			
911012	Ignition Security T-Harness	1	$70.00	$70.00
FORD-ISS	IGNITION SECURITY SYSTEM	1	$80.00	$80.00
	ENGINE IDLE SYSTEM RUNS WITH KEY OUT OF IGNITION			
75899	Stinger DS HPL 12V DC (NiMH)	1	$131.00	$131.00
	FLASHLIGHT MOUNTING LOCATION TO BE DETERMINED			
911014	Harness, Front Node to Dist	2	$54.00	$108.00
BRKT-CIR-15	Bracket, Node/Siren	1	$10.00	$10.00

BEARCOM Always On

Customer: FORT LUPTON CITY GOVERNMENT
Purchase Order # #:

Customer #: 1747990
Sales Rep: Brian Fields

Quote #: 603
Delivery Due Date:

Ship-to Address:
FORT LUPTON CITY GOVERNMENT
130 S. MCKINLEY AVE
FORT LUPTON, CO 80621
United States

Bill-to Address:
FORT LUPTON CITY GOVERNMENT
130 S. MCKINLEY AVE
FORT LUPTON, CO 80621
United States

Item	Item Description	Qty	Price	Total
BRKT-CIR-16	Bracket, Node/Siren	1	$10.00	$10.00
BK2044ITU20	PB450L4 BUMPER '20 PIU	1	$975.00	$975.00
	2020 SETINA PUSHBUMPER WITH 2 FORWARD LIGHTS AND 1 EACH SIDE LIGHTS			
ELUC3H010R	LED INSERT RED	1	$70.00	$70.00
	DRIVER HEADLIGHT RED CORNER LED INSERT			
SAK66P	SA-315 MT KIT EXPLORER PASS	1	$35.00	$35.00
	SIREN BRACKET			
PK0355ITU20TM	#10VS Coated Poly Horiz Recess	1	$697.00	$697.00
	FULL WIDTH PRISONER CAGE WITH MORE ROOM FOR OFFICERS CENTER RECESS PANEL TO MOUNT GUNS UP FRONT AND SLIDING WINDOW			
QK0566ITU20	#12 COATED POLY W/REPLACE	1	$1,069.00	$1,069.00
	REAR REPLACEMENT PRISONER SEAT WITH OUTSIDE SEATBELTS (RETRACTOR IN CENTER) SO NOT TO REACH ACROSS PRISONER			
WK0595ITU20	Window Barrier VS Polycarb	1	$235.00	$235.00
	POLY (PLEXIGLASS) PRISONER WINDOW BARS			
PNFLBSPLT1	Y SPLITTER CABLE, SOUNDOFF	1	$15.00	$15.00
901-0165A	2020 PIU CONSOLE	1	$275.00	$275.00
	POLICE CONSOLE 2020 INTERCEPTOR UTILITY https://www.dandrelectronics.com/901-0165a.html			
C-ARM-105	CON,ACSY,ARM,SDMT,LPD,FLP,H-AD	1	$131.00	$131.00
17040	Magnetic Micr System	2	$42.00	$84.00
	MAGNETIC MIC CLIPS			
CA-0107LS	DUAL CUP HOLDER W/ PME SMALL 9	1	$32.00	$32.00
CA-0103	12 VOLT TRIPLE OUTLET MOUNTS	1	$30.00	$30.00
CA-0130	DARTA 18in. WHITE/RED LED MAP	1	$72.00	$72.00
	RED/WHITE GOOSENECK MAPLIGHT MOUNTING LOCATION TO BE DETERMINED			
02.0334	F/P MOTOROLA XTL 5000 REMOTE	1	$0.00	$0.00
02.0358	FACE PLATE FOR REMOTE HEAD SOU	1	$0.00	$0.00
02.SP3.5	3.5 in. SPACER PLATE F/P	1	$0.00	$0.00
DS-PAN-111	DEVMT,DOCKST,PAN,30,	1	$619.00	$619.00
	NEW CF-31 PANASONIC COMPUTER DOCK			
LPS-104	PWRSPLY,EM,120W,CABLE,3ft.I,OU	1	$157.00	$157.00
	COMPUTER POWER SUPPLY			
C-MD-112	ACTADP, HDM, SLIDE, TS, SP,	1	$245.00	$245.00
	COMPUTER MOTION DEVICE MOUNT TO DOCK AND POST			
C-HDM-204	POLE,TELE,HDM,SDMT,8h,W-SHRTHN	1	$132.00	$132.00
	COMPUTER POST MOUNT TO PASSENGER SIDE OF CONSOLE			
CPE	CUSTOMER PROVIDED EQUIPMENT	1	$0.00	$0.00

BEARCOM Always On

Customer: FORT LUPTON CITY GOVERNMENT
Purchase Order # #:

Customer #: 1747990
Sales Rep: Brian Fields

Quote #: 603
Delivery Due Date:

Ship-to Address:
FORT LUPTON CITY GOVERNMENT
130 S. MCKINLEY AVE
FORT LUPTON, CO 80621
United States

Bill-to Address:
FORT LUPTON CITY GOVERNMENT
130 S. MCKINLEY AVE
FORT LUPTON, CO 80621
United States

Item	Item Description	Qty	Price	Total
	MOTOROLA 2 PIECE RADIO COMPUTER MODEM WITH ANTENNA COMPUTER (CF-31) FACTORY SPOTLIGHTS FACTORY FRONT RED/WHITE OVERHEAD DOME LIGHT FACTORY LED HIGH BEAMS			
MISC	MISC	1	$785.00	$785.00
	TK0247ITU20 CARGO BOX TRAY FLAT TOP WITH ANCHORS; BOTTOM DRAWER NO LOCK			
TPA9289	CARGO RADIO TRAY - TRN	1	$300.00	$300.00
SHIP	SHIPPING AND HANDLING	1	$100.00	$100.00

This quote is valid until: 4/3/2019

Total: $18,491.97

3/26/20

Quoted By:	Lisa McKenzie
Quote Expiration:	9/14/2020
Quote Name:	Fort Lupton CO PD - Additional Licenses TC77 and ZQ520 - BZ
Quote Number:	2020-105762
Quote Description:	

Sales Quotation For
Fort Lupton Police Department
130 S McKinley Ave ATTN Lt. David Hempel
Fort Lupton , CO 80621-1343
Phone: 303-857-4011

Tyler Software

Description	Quantity	License	Software Total	Year One Maintenance
Brazos				
eCitation - Brazos Rapid Extension Framework - PDA	4	$3,400	$3,400	$714
TOTAL:			**$3,400**	**$714**

Tyler Software and Related Services - Annual

Description	Quantity	Unit Price	Annual Fee
Brazos			
Brazos Hosting Fee	1	$238	$238
TOTAL:			**$238**

Third Party Hardware, Software and Services

Description	Quantity	Unit Price	Unit Discount	Total Price	Maintenance
P1063406-062 / Zebra, ZQ500, Vehicle Cradle	4	$97	$0	$388	$0
P1063406-030 / Zebra, ZQ520, Vehicle Charger-open ended	4	$36	$0	$144	$0
ZQ52-AUE0000-00 / Zebra, Printer, ZQ520	4	$611	$0	$2,444	$0
Zebra EVM, HH, TC77, supports GSM + Verizon (TC77HL-5ME24BG-FT)	4	$1,615	$0	$6,460	$0
Z1AE-TC77XX-5C00 / Zebra EVM, Warranty, TC77, 5 year	4	$505	$0	$2,020	$0
TOTAL:				**$11,456**	

Summary	**One Time Fees**	**Recurring Fees**
Total Tyler Software	$3,400	$714
Total Tyler Annual	$0	$238
Total Tyler Services	$0	$0
Total Third Party Hardware, Software and Services	$11,456	$0
Summary Total	**$14,856**	**$952**

CITY OF FORT LUPTON
CITY COUNCIL

CITY OF Fort Lupton EST 1836

COME PAINT YOUR FUTURE WITH US

Zo Stieber, Mayor

Shannon Rhoda, Ward 1
Chris Ceretto, Ward 2
Michael Sanchez, Ward 3

David Crespin, Ward 1
Tommy Holton, Ward 2
Michael Long, Ward 3

AM 2020-075

APPROVE EMERGENCY REPAIRS TO THE FLOATING PUMPS AT THE PERRY PIT BY ARVADA PUMP FOR AN AMOUNT NOT TO EXCEED $6,292.00 ALLOCATED FROM THE UTILITY FUND'S WATER STORAGE DEPARTMENT

I. **Agenda Date:** Council Meeting – April 7, 2020

II. **Attachments:** a. Arvada Pump Quote

III. **Summary Statement:**

Approve emergency repairs to Perry Pit pumps with Arvada Pump for not to exceed $6,292.00

IV. **Submitted by:** _____
Roy Vestal, Public Works Director

V. **Finance Reviewed** _____
Finance Director

VI. **Approved for Presentation:** _____
City Administrator

VII. **Attorney Reviewed** _____ Approved _____ Pending Approval

VIII. **Certification of Council Approval:** _____ City Clerk _____ Date

IX. Detail of Issue/Request:

The Floating Pumps at the Perry Pit are out of Service. The connection between the large pump and the discharge piping has failed. Arvada Pump initially installed the Pumps and they are familiar with the pumps and the required repairs. They are a supplier of the replacement parts also. The small pump will be checked for operation while work is being done on the larger pump. The pumps are needed now as the Water Commissioner is requesting discharge from the reservoir. Staff discovered that the large pump had failed when trying to start the discharge. Temporary pumping has been set up by Jacobs staff to meet the Water Commissioners discharge requirements.

X. Legal/Political Considerations:

None

XI. Alternatives/Options:

- *Approve repairs*
- *The City could continue the pump rental. Costs for the pump rental are approximately $6,500.00 per month.*

XII. Financial Considerations:

The Utility Fund's Water Storage Department has $49,600 budgeted in the Repairs and Maintenance, $9,600 to pay OMI expenses and $12,870 has been spent to replace pumps 1 and 3 at Perry Pit, leaving $27,130 available for this expenditure.

XIII. Staff Recommendation:

Staff recommends approval of the repairs by Arvada Pumps to the Floating Pumps at the Perry Pit.

Arvada Pump Company
5695 Lamar St.
Arvada, Colorado 80002

PHONE: (303) 424-2664

FAX: (303) 424-4058

TO: JON MAYS

COMPANY: CITY OF FORT LUPTON

FROM: RYAN MONROE **DATE:** MARCH 25, 2020

SUBJECT: PERRY PIT PUMP REPAIRS, REVISION 1

Mr. Mays,

Arvada Pump Company is pleased to provide a quotation to make repairs to two pumps in the Perry Pit. For the large pump, the grooved pipe flange adapter appears to have failed and need to be replaced. The work will include a three man crew so that men can be in the water to install the new flange on the pump. The flange will be a Gruvlock figure 7012 furnished with a new rubber gasket. The discharge piping will then be drawn back into place and recoupled to the pump with new stainless steel hardware.

The work on the small pump will include disconnecting the discharge piping and tilting the pump on its barge to expose the pump suction using the winch built into the barge. The suction bell will be removed and cleared of any debris before being reinstalled and the pump test operated. It is assumed that the cause of its locked condition will be found in the first stage and be able to be removed without complete pump disassembly.

The cost of this work will be $6,292.00 and the materials have a lead time of approximately 1 week.

If the small pump requires further work than can be removed with the pump in the water, it will require complete removal of the barge from the lake. This will take a reasonably large crane to perform due to the required reach from flat stable ground to the barge. This work is excluded at this point and can be added if needed after determination of the issues with the pump following the work above.

Exclusions:

- Special insurance including WRAP, OCIP, etc. compliance
- Permits and inspections
- Liquidated damages
- Expedited shipping

Any order resulting from this proposal will be subject to our Standard Terms and Conditions, a copy of which is attached to this proposal. Equipment is quoted FOB factory. Shipping and handling charges, plus applicable sales taxes will be added to the prices quoted above unless specifically included. If your order is tax exempt copies of certificates must be provided at the time of order entry. If you have any questions, please do not hesitate to contact the undersigned. We appreciate the opportunity to provide this proposal and look forward to hearing from you.

Sincerely,

Ryan Monroe

RMonroe@ArvadaPump.com

ARVADA PUMP COMPANY

STANDARD TERMS AND CONDITIONS

I. Warranty

Arvada Pump Company, herein after referred to as the Company, warrants all supplied goods to the extent of the Manufacturer's Standard Warranty, which will be supplied upon request. Supplied equipment, when properly installed and cared for, in accordance with the Manufacturer's published instructions, will operate in accordance with the Manufacturer's published Specifications, and the Company's proposal(s). Workmanship of the Company's employees is warranted to be skillful and performed in a workmanlike manner. Equipment proved defective, in accordance with the Manufacturer's warranty will be repaired in accordance with the Manufacturer's Terms and Conditions. Workmanship provided by the Company's personnel is warranted for a period of one year from the date of completion. Repaired equipment and/or labor provided at our facilities is warranted F.O.B. Arvada, Colorado. In the event any equipment is altered or repaired by non-Company personnel all warranties are void and the Company will not be held liable for any resultant damages.

In no event shall the Manufacturer or the Company be held liable for damage or wear caused by or due to corrosives, abrasives, erosion, foreign objects, external vibration, hydraulic / pneumatic conditions, failure to prime or operate equipment per the Manufacturer's instructions, external electrical conditions, and/or power quality from utility. The Company shall not be held liable for acts of God, including but not limited to lightning, floods, etc., or conditions beyond the control of the Company. The opinion of the Company and/or the Manufacturer will be final.

Existing customer equipment and/or materials will not be warranted against defects in materials, for continued operation, nor against breakage caused by maintenance operations. The Company shall not be held liable for damages including but not limited to well collapse; breakage or leakage of existing drop pipe, casing, tank, valves, piping, or fittings; or landscaping damages resulting from accessing property to service existing well or pump system(s). Pumps and/or valves are not guaranteed to hold prime. The Company shall not be responsible for sound frequency or sound pressure levels generated by pumps, motors, variable speed drives, nor hydraulic systems supplied by such equipment.

Under no circumstances shall the Company be held liable for any consequential or other damages, losses, or expenses arising from installation, use, or other causes, nor shall the Company be held liable for penalties of any description. In no event shall the total liability of the Company exceed the value of this Contract or Client Purchase Order to which these Terms and Conditions shall apply.

II. Shipment/Completion

Promised shipment/completion dates are approximate and are based upon the date of a completed Contract / Purchase Agreement (Order). Acceptance of said Contract or Purchase Agreement (Order) is subject to the Company's receipt of a signed copy of same, at the Company's place of business, and acceptance of the Company's Standard Terms and Conditions. Contracts not signed and returned immediately are subject to delay.

The Company will not be held liable for loss or damages caused by failure to deliver proposed equipment or services resulting from causes beyond its reasonable control, including but not limited to casting failures, acts of government, shipping company failures, supplier delays, weather conditions, or labor difficulties including strikes or lockouts. When the Company's proposal includes non-stocked materials or equipment manufactured by an outside source, shipment/completion dates are based upon the manufacturer's/supplier's promises to the Company. In no event shall the Company or manufacturer/supplier be held liable for any damages, liquidated or otherwise, as a result of failure to deliver or complete a Contract / Order by the required shipment or completion date.

III. F.O.B Point

Material specifically ordered, by the Company, for the Purchaser's account will be shipped F.O.B. point of manufacture or vendor warehouse. All freight charges incurred in transporting such material from said shipping point to the destination address, specified on Contract or Purchaser's Purchase Order shall be the sole responsibility of the Purchaser.

IV. Pricing - Freight Charges, Taxes

Prices quoted are firm for acceptance, within 20 calendar days of the date of this Contract or Proposal, unless stated otherwise. In addition to the labor and material prices quoted, Purchaser shall be liable for applicable use and/or sales taxes and associated shipping and handling charges. If Purchaser is tax exempt, appropriate copies of the ***Purchaser's tax exempt certificates shall accompany the signed Contract or Purchase Agreement (Order).***

V. Insurance / Bonds

Standard Commercial Liability and Workman's Compensation Insurance are included in the cost of our proposal. Certificates will be provided upon request. Any special endorsements, excess coverage, or bonds may be considered upon request and will be charged to the Purchaser at an additional cost.

VI. Terms of Payment

In lieu of other payment terms, shown on the face of this Contract or Proposal, payment shall be made in U.S. Funds immediately upon shipment or project completion. Failure to pay for equipment or services will result in a lien being placed on subject property. Purchaser agrees to pay all costs of collection and all attorneys' fees resulting from failure to pay for materials and/or services. Any account not paid in full within the stated terms shall be subject to interest charges at the rate of 2% per month from the due date, compounded monthly.

VII. Cancellation/Returned Material Charges

Any order, which has been accepted by the Company, is subject to cancellation charges. Equipment and/or services purchased by the Company for the Purchaser's account, and included in the scope of work requested by the Purchaser, will be subject to the supplier's cancellation charges, plus five (5) percent for handling by the Company. Cancellation of services or material supplied by the Company shall be subject to actual costs incurred by the Company including restocking charges and labor (at the Company's, Standard Labor Rates), plus twenty-five (25) percent. In no case shall cancellation charges be less than $100.00 per order.

VIII. Material Returned for Service or Credit

Equipment can only be returned after receiving authorization from the Company. Returned goods shall be cleaned of all hazardous materials and substances, and shall only be allowed to be returned if authorized by the Company and/or manufacturer. Purchaser shall be liable for all costs of return including, handling, packaging, and freight charges.

IX. Water Quality /Wells/Pollution

The Company shall not be held liable for the condition of any well, water system, sewage system or effluent system; nor water quantity, water quality, or effluent quality from Purchaser's system(s). (Chlorine will be utilized as required by Colorado Water Well Regulations to sanitize domestic water systems.) In no event shall the Company be held liable for abrasives, sand, silt, dirt, rust, debris or other pollution found in any well, water system, or sewage/effluent system, nor for the results from such matter being discharged from any system as a result of the Purchaser utilizing equipment or services purchased from the Company. Purchaser shall indemnify and hold harmless the Company, its officers or employees from liability for pollution from any facility, equipment, or source managed or owned by the Purchaser.

CITY OF FORT LUPTON
CITY COUNCIL

CITY OF Fort Lupton EST 1836

COME PAINT YOUR FUTURE WITH US

Zo Stieber, Mayor

Shannon Rhoda, Ward 1
Chris Ceretto, Ward 2
Michael Sanchez, Ward 3

David Crespin, Ward 1
Tommy Holton, Ward 2
Bruce Fitzgerald, Ward 3

AM 2020-07 6

AWARD CONTRACT TO AJI IRRIGATION, INC. FOR AN AMOUNT NOT TO EXCEED $217,000 FOR IRRIGATION BOOSTER PUMPS PROJECT FROM WATER SALES TAX FUND

I. Agenda Date: Council Meeting – April 7, 2020

II. Attachments:

a. AJI Irrigation Proposal
b. Contract Agreement - AJI Irrigation, Inc.
c. Notice of Award

III. Summary Statement:

Approve Contract Agreement with AJI Irrigation, Inc. for 2019 Street Project for not to exceed $217,000.00 from the Water Sales Tax Fund.

IV. Submitted by: _____
Public Works Director

V. Finance Reviewed _____
Finance Director

VI. Approved for Presentation: _____
City Administrator

VII. Attorney Reviewed _____ Approved _____ Pending Approval

VIII. Certification of Council Approval: _____ City Clerk _____ Date

IX. Detail of Issue/Request:

Bid documents were advertised from January 10, 2020 with bid opening on February 21, 2020. One bid was received with from AJI Irrigation, Inc.

AJI Irrigation, Inc. respected company within the irrigation field. The company provided references for projects in Thornton and Adams County.

I feel comfortable that the price was fairly presented and that we do not have any equipment in the final price as negotiated with the contractor. The Filing No. 3 pump has to be operational for the beginning of the irrigation season this year. I am out of time to be able to rebid this project.

Anticipated project start end of April with the Filing NO. 3 pump operational in May and completion in June, 2020.

Project summary costs / funding

FUNDING	***Costs***	***Budgeted***
Irrigation Pumps Project	*$ 217,000.00*	*$ 52,000.00*
Well 26		*$ 250,000.00*
Mustang Irrigation Line	*$ 84,035.00*	
TOTAL FUNDS	***$ 301,035.00***	***$ 302,000.00***

The Well 26 Project will not occur this year as we need to include the well in the City's augmentation plan.

X. Legal/Political Considerations:

Not Applicable.

XI. Alternatives/Options:

- *Accept BID*
- *Award only Filing 3 pump and delay Filing 2 (Filing No 3 $111,200.00)*
- *Reject BID and rebid project*
- *Delay system purchase to a later date*

XII. Financial Considerations:

2020 Budget includes $250,000.00 in the Water Sales Tax Fund for Well 26 and $52,000.00 for the irrigation pump project.

XIII. Staff Recommendation:

Staff recommends approving contract with AJI Irrigation, Inc for Irrigation Booster Pumps Project for not to exceed $217,000.00.

Response to Submittal Review 001

DATE: **March 26, 2020**
SUBJECT: **Fort Lupton – 95% Corrected Final**
FROM: **Precision Pumping Systems**

Changes / Clarifications	Submittal change
Per email from Jason Mower, this station does not include the Intake Screen Supply Valve, Clear water Self-Cleaning Suction Screen, or Level Instrumentation.	The Intake Screen Supply Valve was removed from the station drawing. See **Section 1.1 – Station Drawing**
The station was changed from Suction Lift to Booster System.	Primer Pumps and wet switches were removed from the station drawing. See **Section 1.1 – Station Drawing**

Precision Pumping Systems - 6515 S. Business Way. Boise, ID 83716
Phone: 208-323-5300 Fax: 208-323-5311
www.GoPPS.us

6515 Business Way
Boise, ID 83716
www.gopps.us
208-323-5300

SYSTEM SUMMARY

MODEL: CB##C2C015C00400-060XXXX241INS-6

NON-POTABLE

PERFORMANCE

INITIAL:

DESIGN FLOW RATE:	**400**	GPM
STATION PRESSURE:	**60**	PSI
DISCHARGE PRESSURE:	**60**	PSI

ELECTRICAL INPUT

INITIAL:

VOLTAGE:	**240**
PHASE:	**1**
Hz:	**60**

PUMP AND MOTOR

INITIAL:

FUNCTION	QTY	HP	PERFORMANCE	PUMP TYPE / MOTOR ENCLOSURE RATING
MAIN/DUTY	2	15	200 GPM @ 150' TDH	END-SUCTION CENTRIFUGAL / ODP
JOCKEY	1	5	60 GPM @ 150' TDH	END-SUCTION CENTRIFUGAL / ODP

PIPING AND SKID MATERIAL

INITIAL:

PIPING:	STEEL A53
SKID:	GALVANIZED

COATINGS

INITIAL:

WETTED SURFACES:	PPS BEIGE
PIPE EXTERIOR:	PPS BEIGE
SKID BASE:	GALVANIZED
ENCLOSURE:	N/A

Vertical Multistage pumps (where utilized) require that intake water be free of suspended solids. Failure to adequately pre-screen can result in severe pump damage.

FT LUPTON 2
90% FINAL SUBMITTAL
REV A
QT 16674
03/26/2020

You must initial ALL sections above and provide signature & date below to complete submittal approval process.

APPROVED BY: _____

DATE: _____

ABOUT PPS

PPS
automation • pumping systems

PRECISION PUMPING SYSTEMS' COMPANY & FACILITY FEATURES

State of the Art Manufacturing Facility

Extensive Pump Station Testing Facilities

VFD/ Automation Testing Facility

Large Inventory of replacement equipment & parts

Family Owned & Operated Since 1972

For over 100 years, the Purdy Family has been involved in agricultural irrigation and irrigation/municipal water system sales.

The core staff of PPS has been here from the very beginning. We have decades of accumulated knowledge in our field.

We take great pride in the products, support, and services we offer.

Leaders in Variable Speed Pumping Technology

PPS has been integrating VFD's with Pumps for 40 years.

We use the latest technology to create simpler, safer, and more efficient systems. PPS was one of the first pump station manufacturers to effectively implement programmable logic controllers to achieve this goal.

Easy to understand, Easy to operate touch-screens on every system.

Unparalled Service & Support

Personal Service Available 24/7

Free Remote Technical Support for the Life of the System

3 Year Standard Warranty

Professional Start-up & Training Services

Collaborative Design

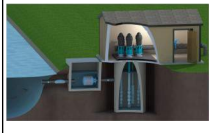

PPS uses the latest software to design perfectly accurate, top quality pump station designs to ensure premium performance and quality. Precise dimensions and site layout for guaranteed ease of installation. PPS will work directly with site contractors before delivery to ensure an easy and successful installation.

Precision Pumping Systems
6515 S Business Way
Boise, ID 83716
(208) 323 - 5300
www.gopps.us

CERTIFIED ISO 9001:2015 COMPANY

UL®

Precision Pumping Systems
6515 South Business Way
Boise, ID 83716
Phone: 208-323-5300
Fax: 208-323-5311

PPS
automation • pumping systems

Certifications

Quality Management System – ISO 9001:2015

PPS Complies with the requirements of ISO 9001:2015 for the manufacturing of pumping systems, pump control panels, and remote monitoring control systems.

Certificate No: CERT-0107103 **File No:** 1694007
Issue Date: April 2, 2018 **Certificate Expiry Date:** March 28, 2021

Safety Management System – (UL 508A / UL QCZJ)

UL 508A - Standard for Industrial Control Panels:
This certifies that the control panel complies with nationally recognized safety standards.

PPS manufactures Control Panels in accordance with the National Electrical code, NFPA 70.

File #: E210861

UL QCZJ - Packaged Pumping Systems:
This certifies that the complete pumping system, including the control panel, complies with nationally recognized safety standards.

PPS manufactures Packaged Pumping Systems in accordance with Article 680 or 682 of ANSI/NFPA 70, "National Electrical Code" (NEC).

File #: E327721

In addition to these safety and quality certifications, each pump station undergoes a complete factory dynamic test to ANSI/HI 14.6 and ANSI/HI 9.6.4 standards and specifications.

ONLINE CERTIFICATIONS DIRECTORY

NITW.E210861
Industrial Control Panels

Page Bottom

Industrial Control Panels

See General Information for Industrial Control Panels

PRECISION PUMPING SYSTEMS E210861
6515 BUSINESS WAY
BOISE, ID 83716 USA

Industrial control panels.

Last Updated on 2009-05-01

Questions? Notice of Disclaimer Page Top

Copyright © 2009 Underwriters Laboratories Inc.®

The appearance of a company's name or product in this database does not in itself assure that products so identified have been manufactured under UL's Follow-Up Service. Only those products bearing the UL Mark should be considered to be Listed and covered under UL's Follow-Up Service. Always look for the Mark on the product.

UL permits the reproduction of the material contained in the Online Certification Directory subject to the following conditions: 1. The Guide Information, Designs and/or Listings (files) must be presented in their entirety and in a non-misleading manner, without any manipulation of the data (or drawings). 2. The statement "Reprinted from the Online Certifications Directory with permission from Underwriters Laboratories Inc." must appear adjacent to the extracted material. In addition, the reprinted material must include a copyright notice in the following format: "Copyright © 2009 Underwriters Laboratories Inc.®"

An independent organization working for a safer world with integrity, precision and knowledge.

ONLINE CERTIFICATIONS DIRECTORY

QCZJ.E327721
Packaged Pumping Systems

Page Bottom

Packaged Pumping Systems

See General Information for Packaged Pumping Systems

PRECISION PUMPING SYSTEMS E327721
6515 BUSINESS WAY
BOISE, ID 83716 USA

Packaged pumping systems, Designated Titan series Cat. Nos. T - Turbine series, followed by additional letter and/or numbers; S - Submersible series, followed by additional letter and/or numbers; CB - Series, followed by additional letters and/or numbers; VMS - Series, followed by additional letter and/or numbers; V - Series, followed by additional letter and/or numbers.

Last Updated on 2009-05-29

Questions? Notice of Disclaimer Page Top

Copyright © 2009 Underwriters Laboratories Inc.®

The appearance of a company's name or product in this database does not in itself assure that products so identified have been manufactured under UL's Follow-Up Service. Only those products bearing the UL Mark should be considered to be Listed and covered under UL's Follow-Up Service. Always look for the Mark on the product.

UL permits the reproduction of the material contained in the Online Certification Directory subject to the following conditions: 1. The Guide Information, Designs and/or Listings (files) must be presented in their entirety and in a non-misleading manner, without any manipulation of the data (or drawings). 2. The statement "Reprinted from the Online Certifications Directory with permission from Underwriters Laboratories Inc." must appear adjacent to the extracted material. In addition, the reprinted material must include a copyright notice in the following format: "Copyright © 2009 Underwriters Laboratories Inc.®"

An independent organization working for a safer world with integrity, precision and knowledge.

CERTIFICATE OF REGISTRATION

This is to certify that

Purdy Enterprises, Inc.

Precision Pumping Systems

6515 Business Way, Boise, Idaho 83716 USA

operates a

Quality Management System

which complies with the requirements of

ISO 9001:2015

for the following scope of certification

Manufacture of pumping systems, pump control panels, and remote monitoring and control systems.

Certificate No.:	CERT-0107103	Original Certification Date:	March 29, 2018
File No.:	1694007	Certification Effective Date:	March 29, 2018
Issue Date:	April 2, 2018	Certificate Expiry Date:	March 28, 2021

Nicole Grantham
General Manager SAI Global Certification Services

ISO 9001

Registered by:
QMI-SAI Canada Limited (SAI Global), 20 Carlson Court, Suite 200, Toronto, Ontario M9W 7K6 Canada**.** This registration is subject to the **SAI Global** Terms and Conditions for Certification. While all due care and skill was exercised in carrying out this assessment, **SAI Global** accepts responsibility only for proven negligence. This certificate remains the property of **SAI Global** and must be returned to them upon request.
To verify that this certificate is current, please refer to the **SAI Global** On-Line Certification Register: www.qmi-saiglobal.com/qmi_companies/

SAI GLOBAL
INFORM. INSPIRE. IMPROVE.

1 Station Overview

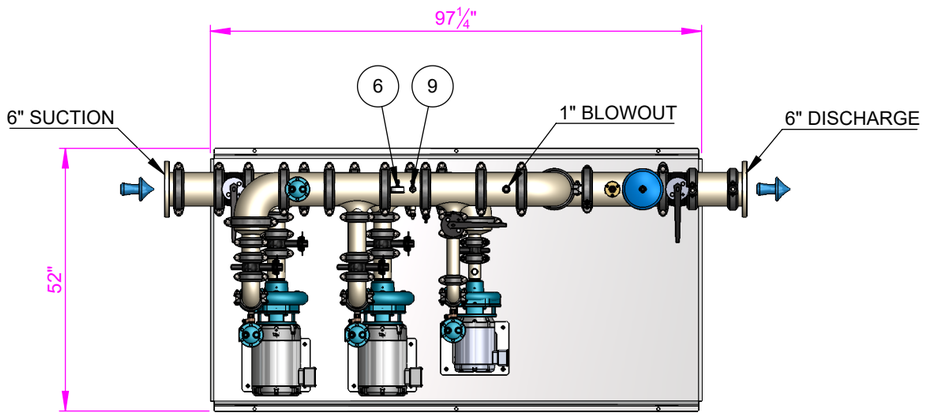

PLAN VIEW

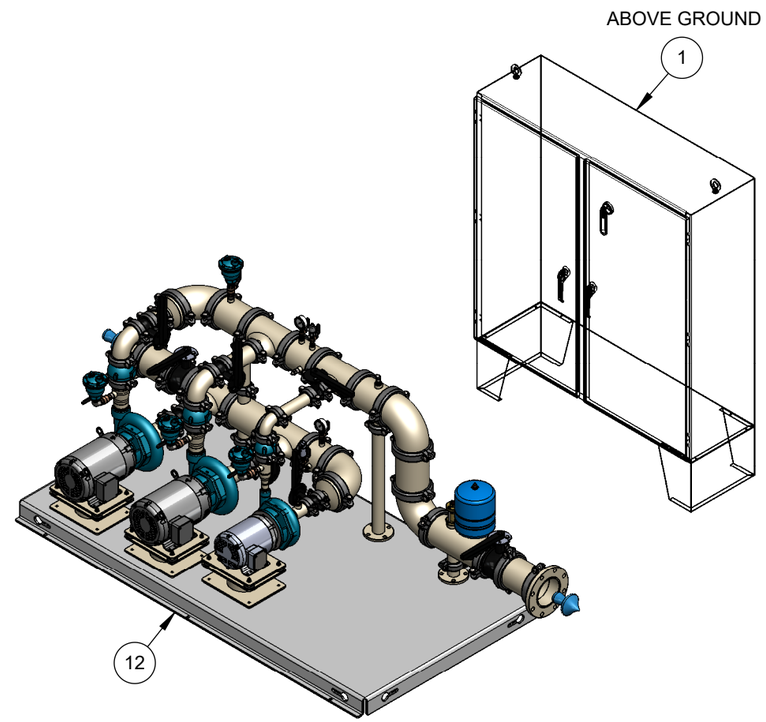

DESIGN SPECIFICATIONS

Design Point:	400 GPM @ 60 PSI		
Intake Pressure:	10 PSI		
Main Pump:	15 HP/Pump	200 GPM @ 150 TDH	
Booster Pump:	5 HP/Pump	60 GPM @ 150 TDH	
Minimum Power:	240 Volt / 1 Phase		
Model #	CB##C2C015C00400-060XXXX241INS-6		

ITEM NO.	DESCRIPTION	Size	QTY.
1	CONTROL PANEL	60"x60"x18"	1
2	FLOW SENSOR, INSERTION, BADGER (OPTIONAL)	2"	1
3	FLOW SWITCH	1/2"	1
4	MOTOR, 3600 RPM	5HP	1
5	MOTOR, 3600 RPM	15 HP	2
6	PRESSURE GAUGE, 100PSI	2-1/2"	1
7	PRESSURE TANK	2 Gal	1
8	PRESSURE TRANSDUCER, -14.5_145PSI, NSF	1/4"	1
9	PRESSURE TRANSDUCER, 100PSI	1/4"	1
10	PUMP, CENTRIFUGAL	7BF	2
11	PUMP, CENTRIFUGAL	9BF	1
12	SKID, BENT	48"x96"	1
13	VACUUM/PRESSURE COMBO GAUGE, -30_+30PSI	2-1/2"	1
14	VALVE, AIR RELIEF	3/4"	4
15	VALVE, BUTTERFLY, GROOVE, LEVER	2"	2
16	VALVE, BUTTERFLY, GROOVE, LEVER	3"	4
17	VALVE, BUTTERFLY, GROOVE, LEVER	6"	2
18	VALVE, CHECK, GROOVED	2"	1
19	VALVE, CHECK, GROOVED	3"	2

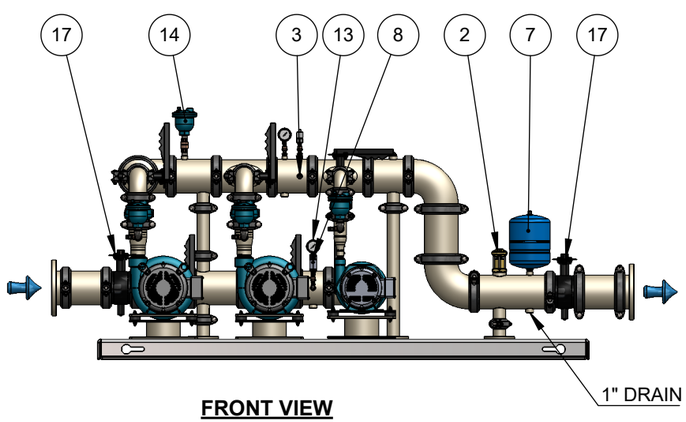

FRONT VIEW

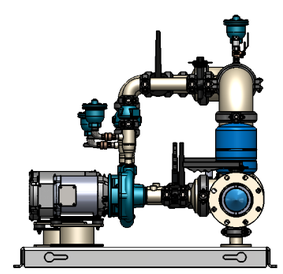

END VIEW

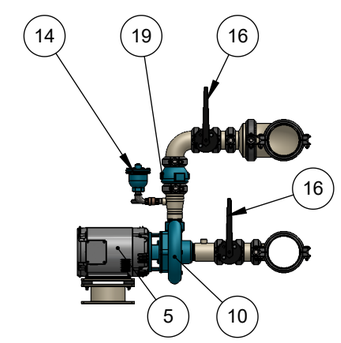

DUTY PUMP

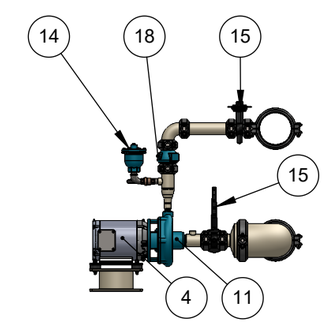

JOCKEY PUMP

NON-POTABLE
NOT FOR FABRICATION

PPS
PRECISION PUMPING SYSTEMS
6515 BUSINESS WAY
BOISE, IDAHO 83716
208-323-5300
www.gopps.us

MATERIAL
Piping: STEEL A53
Skid: GALVANIZED

UNLESS OTHERWISE SPECIFIED:
DIMENSIONS ARE IN INCHES
TOLERANCES:
FRACTIONAL: ±1/8"
ONE PLACE DECIMAL: ±.10
TWO PLACE DECIMAL: ±.05
DO NOT SCALE DRAWING

DRAWN: SEM | DATE: 3/26/2020

TITLE: **BOOSTER SYSTEM PUMP STATION**
PROJECT: FORT LUPTON
LEVEL: 90% Final
PART NO: 2C-CJ-NF-FM-6
JOB: | SIZE: B | SCALE: NTS | SHEET: 1 OF 1 | REV -

TECHNICAL DATA SHEET

PPS Beige
POLYESTER TGIC POWDER COATING
Matte Finish
BEIGE

LS #:

RoHS Compliant

POWDER PROPERTIES

SPECIFIC GRAVITY:	1.64 CALCULATED
COVERAGE:	58.9 SQ.FT./LB. @ 2 MILS (100% EFFICIENCY)
PARTICLE SIZE:	25 - 50 MICRONS AVERAGE
STORAGE;	STORE BELOW 80 DEGREES F, IN COOL DRY ENVIRONMENT
SHELF LIFE:	MINIMUM OF 1 YEAR
CURE SCHEDULE:	(METAL TEMPERATURE) 10 MINUTES @ 400 DEGREES F.

CURED FILM PROPERTIES

ALL TESTS WERE PERFORMED AT A FILM THICKNESS OF: 1.5 to 3.0 mils

TEST	METHOD	RANGE
DIRECT IMPACT(INCH LBS.):	D2794	140 in.lbs.
INDIRECT IMPACT(INCH LBS.):	D2794	140 in.lbs.
PENCIL HARDNESS:	D3363	2H
CROSS HATCH ADHESION:	D3359B	4B
FLEXIBILITY(CONICAL MANDREL):	D1737/D522	100%

CHEMICAL AND CORROSION EXPOSURE TESTS

CHEMICAL RESISTANCE:	Good to excellent resistance to most solvents, oils, acids, and alkalies.
OVERBAKE RESISTANCE:	Slight yellowing is evident, especially in white and pastel colors.

All tests were performed on 24 gauge Bonderite 1000 panels.

APPLICATION

This product was designed to be applied by electrostatic spray, on steel, galvanized steel, or aluminum. Most powders can be reclaimed, sieved and recycled, if proper housekeeping is maintained.

PRETREATMENT

The substrate pretreatment prior to powder coating is a critical factor in developing maximum corrosion resistance and maximizing the lifetime of the product.

C.R.S. (Iron phosphate):	2 to 5 stages depending upon soil level, and quality desired.
C.R.S. (Zinc phosphate):	5 to 9 stages depending upon soil level, and quality desired.
Galvanized steel (Zinc phosphate):	5 to 7 stages depending on soil level, and quality desired. Galvanized steel must be degassed at 5 degrees above cure temperature to minimize gassing.
Aluminum (Chromate):	5 stage system is normally needed.
Aluminum (phosphate):	5 stage system is normally needed.

C11JA

IMPORTANT: Warranty and Disclaimer – The performance characteristics of these products vary according to the product application, operating conditions, materials applied to or use. Since these factors can affect results, we strongly recommend that you make your own tests to determine your satisfaction whether the product is of acceptable quality, has not been affected by storage or transportation and is suitable for your particular purpose under your own operating conditions prior to using any product in full scale production. Seller warrants the products to be free from defects in materials and workmanship. SUCH WARRANTY IS EXCLUSIVE AND IS IN LIEU OF ANY OTHER WARRANTY, EXPRESSED OR IMPLIED, INCLUDING, BUT NOT LIMITED TO, ANY IMPLIED WARRANTY OF MERCHANTABILITY OF FITNESS FOR A PARTICULAR PURPOSE. No representative of ours has authority to waive or change this provision, which applies to all sales of these products.

www.cardinalpaint.com

Southern California
Corporate Headquarters
1329 Potrero Avenue
South El Monte, CA 91733
tel 626.444.9274 fax 626.444.0382

Powder Coating
Manufacturing
tel 626.937-6767

Arizona tel 602.437.2401
Colorado tel 303.286.1876
Missouri tel 314.878.3010
Pennsylvania tel 814.728.0721
Washington State tel 425.483.5665
Northern California tel 408.452.8522
Minnesota tel 952.469.6021
North Carolina tel 336.882.9493
Texas tel 214.333.9801
Hong Kong tel 852.2410.8200

2 Control Panel Components

2.1

Programmable Logic Controller (PLC) and Components

MicroSmart FC6A Plus PLC

CPU Module Specifications

PRODUCT DESCRIPTION

This next-generation IDEC MicroSmart FC6A Plus PLC performs beyond micro PLC limits. With its 2,060 I/O capacity, it can control large machines or entire small-scale manufacturing facilities, providing more capabilities for the most demanding applications.

KEY FEATURES

- Dual Ethernet ports
- iOS and Android WindEDIT app
- Maximum 2,060 digital I/O
- Maximum 511 analog I/O
- Bluetooth communication
- BACnet/IP and Modbus TCP

Classl Div2 Hazardous Location

FC6A PLUS CPU MODULES

Part No.	High-speed Counter & Pulse Output	Power	Input	Output	Interface	I/O Points
FC6A-D16R1CEE	• High-speed counter Maximum input frequency: 100kHz • Pulse output (*1) Maximum output frequency: 100kHz	24V DC	24V DC (Sink/ Source)	Relay Output 2A (240V AC-2A, 30V DC-2A)	Port 1 (USB) Port 2 (Ethernet) Port 3 (Ethernet)	16 points (8/8)
FC6A-D16P1CEE				Transistor Source Output 0.5A		
FC6A-D16K1CEE				Transistor Sink Output 0.5A		
FC6A-D32P3CEE				Transistor Source Output 0.1A		32 points (16/16)
FC6A-D32K3CEE				Transistor Sink Output 0.1A		

SPECIFICATIONS

Part No.	FC6A-D16R1CEE FC6A-D16P1CEE FC6A-D16K1CEE	FC6A-D32P3CEE FC6A-D32K3CEE
Rated Power Voltage	24V DC	
Allowable Voltage Range	20.4 to 28.8V DC (including ripple)	
Maximum Power Consumption (CPU module)	FC6A-D16R1CEE: 2.88W (24V DC) FC6A-D16P1CEE: 2.88W (24V DC) FC6A-D16K1CEE: 2.88W (24V DC) FC6A-D32P3CEE: 3.36W (24V DC) FC6A-D32K3CEE: 3.36W (24V DC)	
Inrush Current	35A maximum	
Allowable Momentary Power Interruption	10ms (at rated voltage)	
Operating Temperature	–10 to +55°C (no freezing)	
Storage Temperature	–25 to +70°C (no freezing)	
Relative Humidity	Level RH1 (IEC 61131-2) 10 to 95% (no condensation)	
Altitude	Operation: 0 to 2,000m, 795 to 1,013hPa, Transport: 0 to 3,000m, 701 to 1,013hPa	
Pollution Degree	2 (IEC 60664-1)	
Corrosion Immunity	Free from corrosive gases	
Dielectric Strength	Between power and FE terminals: 500V AC, 1 minute Between transistor output and FE terminals: 500V AC, 1 minute Between power and input terminals: 500V AC, 1 minute Between power and relay output terminals: 2,300V AC, 1 minute Between input and relay output terminals: 2,300V AC, 1 minute	Between input and FE terminals: 500V AC, 1 minute Between relay output and FE terminals: 2,300V AC, 1 minute Between power and transistor output terminals: 500V AC, 1 minute Between input and transistor output terminals: 500V AC, 1 minute

SPECIFICATIONS CONT.

Insulation Resistance	Between power and FE terminals: 100MΩ or higher (500V DC megger) Between transistor output and FE terminals: 100MΩ or higher (500V DC megger) Between power and input terminals: 100MΩ or higher (500V DC megger) Between power and relay output terminals: 100 MΩ or higher (500V DC megger) Between input and relay output terminals: 100MΩ or higher (500V DC megger)	Between input and FE terminals: 100MΩ or higher (500V DC megger) Between relay output and FE terminals: 100MΩ or higher (500V DC megger) Between power and transistor output terminals: 100 MΩ or higher (500V DC megger) Between input and transistor output terminals: 100 MΩ or higher (500V DC megger)
Noise Resistance	AC/DC power terminals: 1kV, 50ns to 1μs I/O terminals (coupling clamp): 1.5kV, 50ns to 1μs coupling adapter	
Vibration Resistance	5 to 8.4Hz amplitude 3.5mm 8.4 to 150Hz acceleration 9.8m/s^2 (1G), 2 hours per axis on each of three mutually perpendicular axes (IEC 61131-2)	
Shock Resistance	147m/s^2 (15G), 11ms duration, 3 shocks per axis on three mutually perpendicular axes	
Degree of Protection	IP20 (IEC 60529)	
Power Supply Wire	UL1007 AWG24-16, UL2464 AWG24-16, UL1015 AWG20-16	
Grounding Wire	UL1007 AWG16	
Ground	D-type ground (Class 3 ground)	
Mounting	DIN rail or panel mounting	
Weight (approx.)	FC6A-D16R1CEE: 290g FC6A-D16P1CEE: 275g FC6A-D16K1CEE: 275g	FC6A-D32P3CEE: 255g FC6A-D32K3CEE: 255g

FUNCTION SPECIFICATIONS

Part No.		FC6A-D16R1CEE FC6A-D16P1CEE (*4) FC6A-D16K1CEE (*4)	FC6A-D32P3CEE (*4) FC6A-D32K3CEE (*4)
Control System		Stored program system	
Instruction Words	Basic	42	
	Advanced	130	
Program Capacity (*1)		800KB (100,000 steps)	
User Program Storage		Serial Flash Memory (100,000 times rewritable)	
Processing Time	Basic Instruction	21μs/1,000 steps	
	END Processing (*2)	1ms maximum	
I/O Points	Input	8 points	16 points
	Output	8 points	16 points
Expandable Modules		7 modules (*3)	
Expandable I/O Points with Expansion Modules		224 points	
Expandable Modules with Unibody Type Expansion Modules		8 modules	
Expandable I/O Points with Unibody Type Expansion Modules		256 points	
Expandable Modules with Separate Type Expansion Modules (*5)		63 modules (separate type master: 1 module maximum, separate type slave: 10 modules maximum)	
Expandable I/O Points with Separate Type Expansion Modules (*5)		2,016 points	
Internal Relay		15,400 points	
Special Internal Relay		1,600 points	
Shift Register		256 points	
Data Register		60,000 points	
Non-Retentive Data Register		200,000 points	
Special Data Register		900 points	
Counter		512 points	
Timer (1ms, 10ms, 100ms,1s)		2,000 points	
Clock		Clock accuracy: ±30 sec/month (typical) at 25°C	
RAM Backup	Backup Data	Internal relay, shift register, counter, data register, timer, special data register, special internal relay, clock data	
	Battery	Lithium primary battery (BR2032)	
	Battery Life	Approx. 4 years	
	Replaceability	Possible	
Self-diagnostic Function		Keep data, user program sum check (serial flash memory), user program sum check (RAM), timer/counter preset value sum check, user program syntax check, user program execution check, WDT check, user program write check, power failure, clock error, data ink connection check, I/O bus initialization check	
Input Filter		0 ms (without filter), 3 to 15ms (selectable in increments of 1ms) I14, I15, I16, I17: 3ms	
Catch Input/Interrupt Input		Six inputs I0, I1, I3, I4, I6, I7 (Minimum turn on pulse width: 5μs max./Minimum turn off pulse width: 5μs max.)	

USB PORT SPECIFICATIONS

USB Type	USB mini-B
USB Standard	USB 2.0
Isolation	Not isolated from the internal circuit
Communication Function	Maintenance communication to PC

ETHERNET PORT 1 SPECIFICATIONS

Communication Type	IEEE802.3 compliant
Communication Speed	10BASE-T, 100BASE-TX
Connector	RJ45
Cable	CAT.5STP
Maximum Cable Length	100m
Isolation	Pulse transformer isolation
Communication Function	Maintenance communication (server), user communication (server/client), user communication UDP, Modbus TCP (server/client), Email, Web Server, PING, SNTP, FTP server/client, BACnet/IP server

ETHERNET PORT 2 SPECIFICATIONS

Communication Type	IEEE802.3 compliant
Communication Speed	10BASE-T, 100BASE-TX
Connector	RJ45
Cable	CAT.5STP
Maximum Cable Length	100m
Isolation	Pulse transformer isolation
Communication Function	Maintenance communication (server), user communication (server/client), user communication UDP, Modbus TCP (server/client), PING

FUNCTION SPECIFICATIONS CONT.

High-speed Counter	Maximum Counting Frequency and High-speed Counter Points	Total 6 points Single/two-phase selectable: 100kHz (single-phase: 6 points, two-phase: 3 points)
	Counting Range	0 to 4,294,967,295 (32 bits)
	Operation Mode	Rotary encoder mode, adding counter mode, frequency measurement mode
Analog Potentiometer	Quantity	1 point
	Data Range	0 to 1,000
Analog Voltage Input	Quantity	1 point
	Input Voltage Range	0 to 10V
	Input Impedance	Approx. 100KΩ
	Digital Resolution	Approx. 4,000 steps (12 bits)
Pulse Output (transistor output model only)	Quantity	4 points
	Maximum Output Pulse Frequency	Q0, Q2, Q4, Q6: 100kHz
	Reversible Control	Single-pulse output mode: 4 axis (Q0-Q7), Dual-pulse output mode: 4 axis (Q0-Q7)
	PWM Output	Duty cycle 0.1 to 100.0% (increments of 0.1%), Output pulse frequency 15 to 5,000 Hz (increments of 1 Hz): 4 points (Q0, Q2, Q4, Q6) (Adjust 5μs minimum as ON time and 15μs minimum as OFF time.)
USB Port		USB mini-B (maintenance communication)
Ethernet Port 1		Maintenance communication (server), user communication TCP (server/client), user communication UDP, Modbus TCP (server/client), Email, Web Server, PING, SNTP, FTP server/client
Ethernet Port 2		Maintenance communication (server), user communication TCP (server/client), user communication UDP, Modbus TCP (server/client), PING
Cartridge (option)		Two cartridges can be added (when using FC6A–HPH1)/One cartridge can be added (when using FC6A–PH1)
SD Card Slot		Embedded
HMI Module (option)		Yes

*1: 1 step equals 8 bytes.
*2: Not including expansion I/O service time, counter timer processing time, data link processing time, and interrupt processing time.
*3: A maximum of 5 modules can be connected when using the expansion interface module separate type master.
*4: Transistor output model
*5: Communication module cannot be connected.

INPUT SPECIFICATIONS

Part No.		FC6A-D16R1CEE FC6A-D16P1CEE FC6A-D16K1CEE	FC6A-D32P3CEE FC6A-D32K3CEE
Input Points		8 (8/1 common)	16 (16/1 common)
Rated Input Voltage		24V DC: 24V DC sink/source input signal	
Input Voltage Range		0 to 28.8V DC	
Rated Input Current		High speed input port 5mA/pt, middle/normal speed input port 7mA/pt	
Input Impedance		High speed input port 4.9kΩ, middle/normal speed input port: 3.4kΩ	
Input Delay	Turn ON Time	High speed input port: 5μs + filter value Middle speed input port: 35μs + filter value Normal speed input port: 35μs + filter value	
	Turn OFF Time	High speed input port: 5μs + filter value Middle speed input port: 35μs + filter value Normal speed input port: 100μs + filter value	
Isolation		Between input terminals: Not isolated Internal circuit: Optocoupler-isolated	
Input Type		Type1 (IEC 61131-2)	
External Load for I/O Interconnection		Not needed	
Signal Determination Method		Static	
Effect of Improper Input Connection		Both sinking and sourcing input signals can be connected, therefore reverse connection does not cause damage. If any input exceeding the rated value is applied, permanent damage may be caused.	
Cable Length		3m in compliance with electromagnetic immunity	
Connector	Insertion Durability	100 times minimum	
	Applicable Ferrule	1-wire: AI 0.5-8 WH (Phoenix Contact) 2-wire: AI-TWIN 2×0.5-8 WH (Phoenix Contact)	

RELAY OUTPUT SPECIFICATIONS

Part No.		FC6A-D16R1CEE
Relay Output Points		8
Output Points per Common Line	COM1	4
	COM2	4
Output Type		1NO
Maximum Load Current	Per Point	2A
	Per Common	COM1: 7A COM2: 7A
Minimum Switching Load		1mA/5V DC (reference value)
Initial Contact Resistance		30mΩ maximum

RELAY OUTPUT SPECIFICATIONS CONT.

Electrical Life		100,000 operations minimum (rated resistive load 1,800 operations/hour)
Mechanical Life		20,000,000 operations minimum (no load 18,000 operations/hour)
Rated Load		Resistive load: 240V AC 2A, 30V DC 2A Inductive load: 240V AC 2A (cos ø = 0.4), 30V DC 2A (L/R =7 ms)
Connector	Insertion/Removal Durability	100 times minimum
	Applicable Ferrule	1-wire: AI 0.5-8 WH (Phoenix Contact) 2-wire: AI-TWIN 2×0.5-8 WH (Phoenix Contact)

TRANSISTOR OUTPUT SPECIFICATIONS

Part No.		FC6A-C16P1CEE FC6A-C16K1CEE	FC6A-D32P3CEE FC6A-D32K3CEE
Transistor Output Points		8 (8/1 common)	16 (16/1 common)
Output Type	Transistor Sink	FC6A-D16K1CEE/FC6A-D32K3CEE	
	Transistor Source	FC6A-D16P1CEE/FC6A-D32P3CEE	
Rated Load Voltage		24V DC	
Voltage Tolerance		19.2 to 28.8V DC	
Rated Load Current	Per Point	0.5A	0.1A
	Per Common	4.0A	1.6A
Output Delay	Turn ON Time	High speed input port: 5μs Normal speed input port: 300μs	
	Turn OFF Time	High speed input port: 5μs Normal speed input port: 300μs	
Isolation		Between output terminal and Internal circuit: Optocoupler-isolated Between output terminals: Not isolated	
Voltage Drop (ON Voltage)		1V max (voltage between COM and output terminal when output is on.)	
Inrush Current		1A	0.2A
Leakage Current		0.1mA maximum	
Clamping Voltage		39V ±1V	
Maximum Lamp Load		12W	2.4W
Inductive Load		L/R=10ms (28.8V DC, 1Hz)	
Overcurrent Protection		Transistor Sink Output: No Transistor Source Output: Overcurrent is detected by current limit resistance. (*1)	
External Current Draw		100mA maximum, 24V DC (power voltage at the +V terminal, -V terminal at source)	
Connector	Insertion Durability	100 times minimum	
	Applicable Ferrule	1-wire: AI 0.5-8 WH (Phoenix Contact) 2-wire: AI-TWIN 2×0.5-8 WH (Phoenix Contact)	—

*1: This overcurrent signals consist of one signal per 4 point outputs. When microprocessor gets this overcurrent signal by interrupt input, microprocessor turns off 4pt outputs of this category at fixed time (approx. 1sec).

DIMENSIONS (mm)

FC6A-D16R1CEE
FC6A-D16K1CEE
FC6A-D16P1CEE

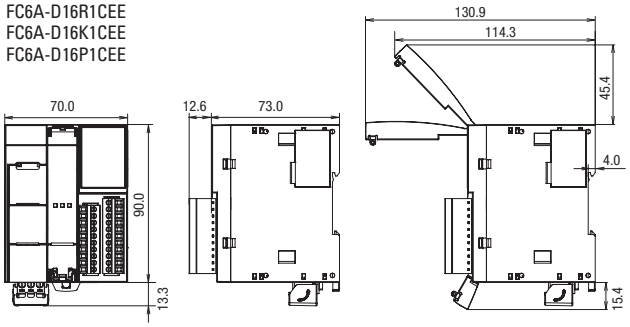

FC6A-D32K3CEE
FC6A-D32P3CEE

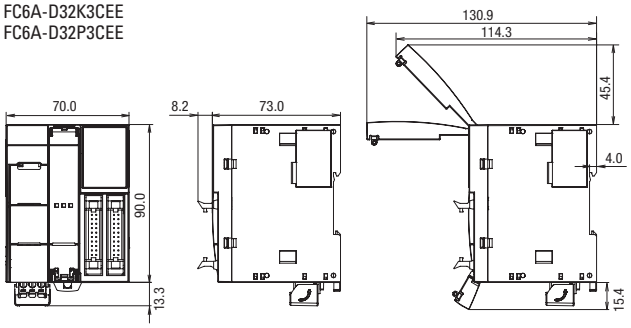

IDEC Corporation • 1175 Elko Drive • Sunnyvale, CA 94089 • 800-262-IDEC (4332) • Fax: 408-745-5258 • www.IDEC.com/usa

©2018 IDEC Corporation. All Rights Reserved. FC9Y-DS400-1 9/18 7.5K

High Performance Touchscreens

Section 2.1.2
PLC
Touchscreen

IDEC

PRODUCT DESCRIPTION

New Enhanced High Performance Series:
5.7" to 15" displays

IDEC touchscreens are redefining Human Machine Interaction. Our new High Performance 5.7", 8.4", 10.4" and 12.1" HMIs offer upgraded features and with the addition of a new 15" model, users have options for applications on any size equipment.

Featuring up to 800 cd/m^2 brightness, 1024 x 768 pixels high resolution displays, and over 100,000 hours of backlight life, they are the brightest, longest-lasting displays on the market.

An exceptionally wide operating temperature range of -20°C to +60°C as well as IP66F, IP67F, Type 4X, 12, 13, and Class I Div 2 approval ratings, assures reliable operation in the toughest environments. These touchscreens are built for endurance and are backed by an industry leading three-year warranty.

TOUCHSCREEN PART NUMBERS

Display Screen	Part Number	Description
15"	HG5G-VFXT22MF-B	15 inch Color TFT LCD display Black Bezel with multimedia function
12.1"	HG4G-VCXT22MF-B	12.1 inch Color TFT LCD display Black Bezel with multimedia function
10.4"	HG3G-VAXT22MF-W	10.4 inch Color TFT LCD display Light Gray Bezel with multimedia function
	HG3G-VAXT22MF-B	10.4 inch Color TFT LCD display Black Bezel with multimedia function
8.4"	HG3G-V8XT22MF-W	8.4 inch Color TFT LCD display Light Gray Bezel with multimedia function
	HG3G-V8XT22MF-B	8.4 inch Color TFT LCD display Black Bezel with multimedia function
5.7"	HG2G-V5FT22TF-W	5.7 inch Color TFT LCD display Light Gray Bezel
	HG2G-V5FT22TF-B	5.7 inch Color TFT LCD display Black Bezel

KEY FEATURES

- High Resolution Display: 1024 x 768 pixels (8.4", 10.4", 12.1", 15"), 640 x 480 pixels (5.7")
- Backlight light of 100,000 hours with up to 800 cd/m^2 brightness
- Wide range of Operating Temperature: -20°C to +60°C
- Multiple Protocols - up to 4 protocols simultaneously
- Remote Access, Monitor and Control Function
- FTP, Email, Mobile App and Custom Web Page
- Audio and Video Interface (8.4", 10.4", 12.1", 15")
- Supports Analog and Discrete I/O Expansion Modules
- IP66F/67F, Type 4X, 12 and 13, Class I Div 2
- 3 Year Warranty

c UL us CE

ClassI Div2
Hazardous
Location

GENERAL SPECIFICATIONS

	5.7"	8.4"	10.4"	12.1"	15"
Model	HG2G-V5FT22TF	HG3G-V8XT22MF	HG3G-VAXT22MF	HG4G-VCXT22MF	HG5G-VFXT22MF
Rated Power Voltage	24V DC				
Power Voltage Range	20.4 to 28.8V DC				
Power Consumption	18W maximum 8W maximum when not using USB2 or EXT 4W maximum when Backlight OFF	25W maximum 15W maximum when not using USB2 or EXT 7W maximum when Backlight OFF			25W maximum 20W maximum when not using USB2 or EXT 7W maximum when Backlight OFF
Allowable Momentary Power Interruption	10 ms maximum				
Inrush Current	30A maximum				
Dielectric Strength	1,000V AC, 10 mA, 1 minute between power and FG terminals				
Operating Temperature	-20 to +60˚C (no freezing)				
Operating Humidity	10 to 90% RH (no condensation)				
Storage Temperature	-20 to +70˚C (no freezing)				
Storage Humidity	10 to 90% RH (no condensation)				
Pollution Degree	2				
Vibration Resistance	5 to 8.4 Hz amplitude 3.5 mm, 8.4 to 150 Hz acceleration 9.8 m/s^2 10 cycles (100 minutes) on each of three mutually perpendicular axes				
Shock Resistance	147 m/s^2, 11 ms 5 shocks on each of three mutually perpendicular axes				
Noise Immunity	Fast transient/burst test, Power terminals: ±2 kV, Communication line: ±1 kV (IEC/EN61131-2)				
Electrostatic Discharge	Contact ±6 kV, air ±8 kV (IEC/EN61131-2)				
Corrosion Immunity	Free from corrosive gases				
Degree of Protection *1	IP66F/IP67F (IEC 60529) (front part when mounted) Type 4X, 12, and 13				
Switching Element	Analog resistive membrane				
Operating Force	3N maximum				
Mechanical Life	1,000,000 operations				
Sound Acknowledgement	Electronic buzzer	Electronic buzzer or speaker output			
Dimensions	167.2W x 134.7H x 54.4D mm	231W x 176H x 54.4D mm	270W x 212H x 52.7D mm	314W x 240H x 54.1D mm	364.5W x 291.5H x 54.8D mm
Weight (approx.)	0.65 kg	1.25 kg	1.65 kg	2.1 kg	3.2 kg
Approvals	Safety Standards: UL61010-1, UL61010-2-201, UL12.12.01 CSA C22.2 No.61010-1-12 CSA C22.2 No.61010-2-201 CSA C22.2 No.213 Class I Div 2 Ship Classification Standards (pending): ABS, LR, NK, DNV GL				

Do not use the touchscreen in an environment subject to strong ultaviolet rays, otherwise the LCD quality will deteriorate.

*1 Protection degree of the front surface after mounting. Operation not guaranteed in certain environments.

DISPLAY SPECIFICATIONS

	5.7"	8.4"	10.4"	12.1"	15"
Model	HG2G-V5FT22TF-B or W	HG3G-V8XT22MF-B or W	HG3G-VAXT22MF-B or W	HG4G-VCXT22MF-B	HG5G-VFXT22MF-B
Display Type	Color TFT LCD				
Color Depth	65,536				
User Memory	56 MB				
Display Resolution	640W x 480H pixels	1024W x 768H pixels			
Backlight	White LED				
Backlight Life *1	100,000 hours min.				
Brightness *2	800 cd/m^2		700 cd/m^2	600 cd/m^2	650 cd/m^2
Brightness Adjustment	48 scales				
SD Card Slot	✓				
FC6A Analog & Digital I/O Cards Supported	2	4			
Ethernet Port	1 RJ-45				
USB Ports	1 Type A & 1 MiniB				
Serial Ports	2 (RS-232, RS-485, RS-422 configurable)				
Video In	—	2 Composite Video RCA connector (NTSC or PAL)			
Audio Out	—	3.5 mm audio mini-jack (stereo)			

*1 The backlight life refers to the time until the surface brightness reduces by half after continuous use at 25°C. *2 Brightness of the LCD only.

ACCESSORIES

	Part Number	Quantity	Description	5.7"	8.4"/10.4"	12.1"	15"
Programming Software	SW1A-W1C	1	Automation Organizer	✓	✓	✓	✓
USB Maintenance Cable	HG9Z-XCM2A	1	USB Programming Cable USB-MiniB (2 m)	✓	✓	✓	✓
Mounting Clip	SLD-K02	1	Replacement clip (4pcs are supplied with HMI)	✓	—	—	—
	HG9Z-4K2PN04	4	Replacement clips (4pcs are supplied with HMI)	—	✓	✓	—
	HG9Z-4K2PN06	6	Replacement clips (6pcs are supplied with HMI)				✓
Host Communication Plug	HG9Z-XT09V	1	Replacement terminal block plug (1 is supplied with HMI)	✓	—	—	—
	HG9Z-XT09	1	Replacement terminal block plug (1 is supplied with HMI)	—	✓	✓	✓
Replacement Battery	HG9Z-XR2	1	Lithium battery CR2032 (one battery is supplied with HMI)	✓	✓	✓	✓
USB Cable Lock Pin	HG9Z-XU1PN05	5	Used to lock USB cable (for USB2)	✓	✓	✓	✓
USB Panel-Mount Extension Cable	HG9Z-XCE11	1	For USB-A port (1 m)	✓	✓	✓	✓
	HG9Z-XCE21	1	For USB-mini B port (1 m)	✓	✓	✓	✓
Memory Card	HG9Z-XMS2	1	SD Memory Card (2 GB)	✓	✓	✓	✓
Protective Cover	HG9Z-2E2	1	Use with 5.7" HMI (Covers entire front of HMI)	✓	—	—	—
Protective Sheet *1	HG9Z-2D5	1	Use with 5.7" HMI (Sheet lays over LCD area)	✓	—	—	—
	HG9Z-3D8	1	Use with 8.4" HMI (Sheet lays over LCD area)	—	✓	—	—
	HG9Z-3DA2	1	Use with 10.4" HMI (Sheet lays over LCD area)	—	✓	—	—
	HG9Z-4DC	1	Use with 12.1" HMI (Sheet lays over LCD area)	—	—	✓	—
	HG9Z-5DFPN01	1	Use with 15" HMI (Sheet lays over LCD area)	—	—	—	✓
Expansion Module Clamp *2	HG9Z-XJ3	1	Short type for installing expansion I/O modules (Total width 17.6 to 41.1 mm)	✓	✓	✓	✓
	HG9Z-XJ4	1	Long type for installing expansion I/O modules (Total width 47 to 68.8 mm)	✓	✓	✓	✓
	HG9Z-XJ5	1	Extra-Long type for installing expansion I/O modules (Total width 70.1 to 93.9 mm)	✓	✓	✓	✓

*1 The protective sheet is UV resistant, however, resistance against diret sunlight in outdoor usage is not guaranteed.
*2 Use the expansion module clamp when using expansion modules.
Order the module clamp by referring to the width of the module shown in the dimensions of each module.
Note: When connecting expansion modules to the HMI's, note the limits shown below:
-Output Current flow rate at 5V: 130 mA max. (HG2G/3G/4G/5G)
-Output Current flow rate at 24V: 50 mA max. (HG5G);24V: 150 mA max. (HG2G/3G/4G)

DIMENSIONS (All dimensions in mm)

HG2G-V5 5.7"

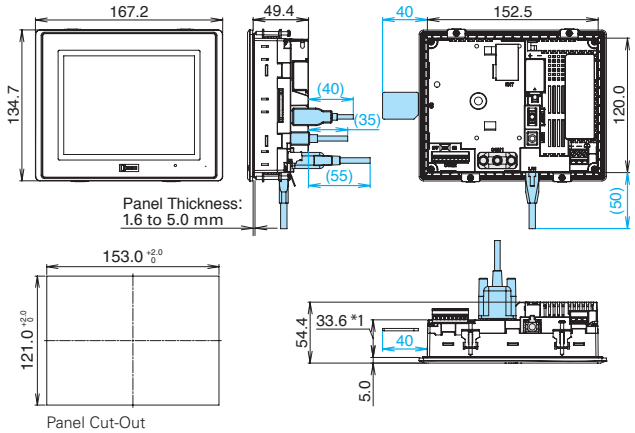

HG3G-V8 8.4"

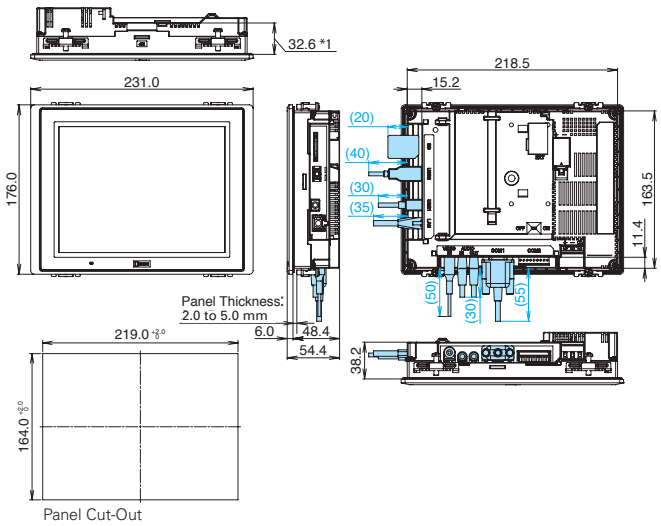

HG3G-VA 10.4"

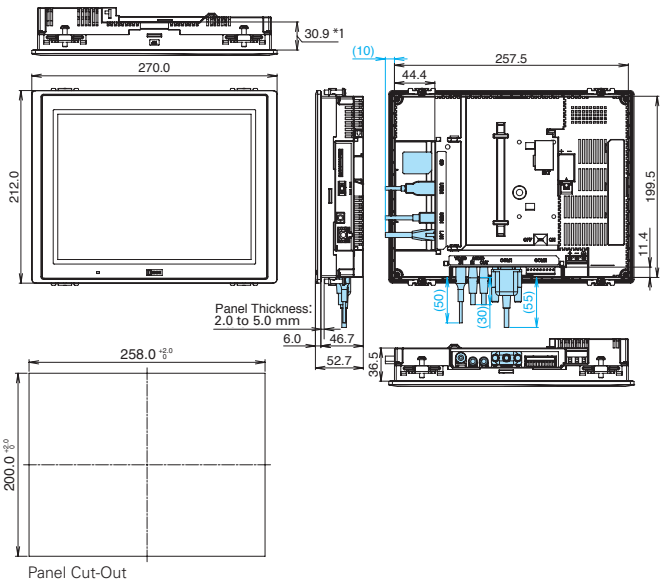

HG4G-VC 12.1"

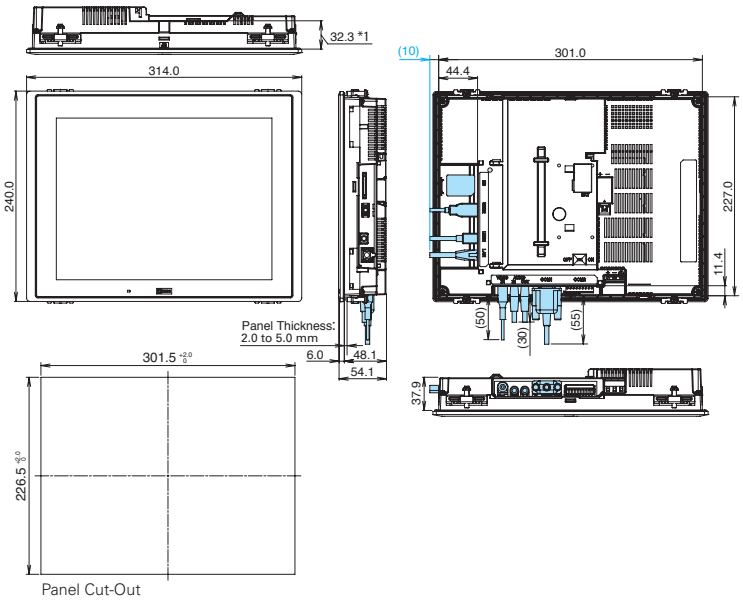

HG5G-VF 15"

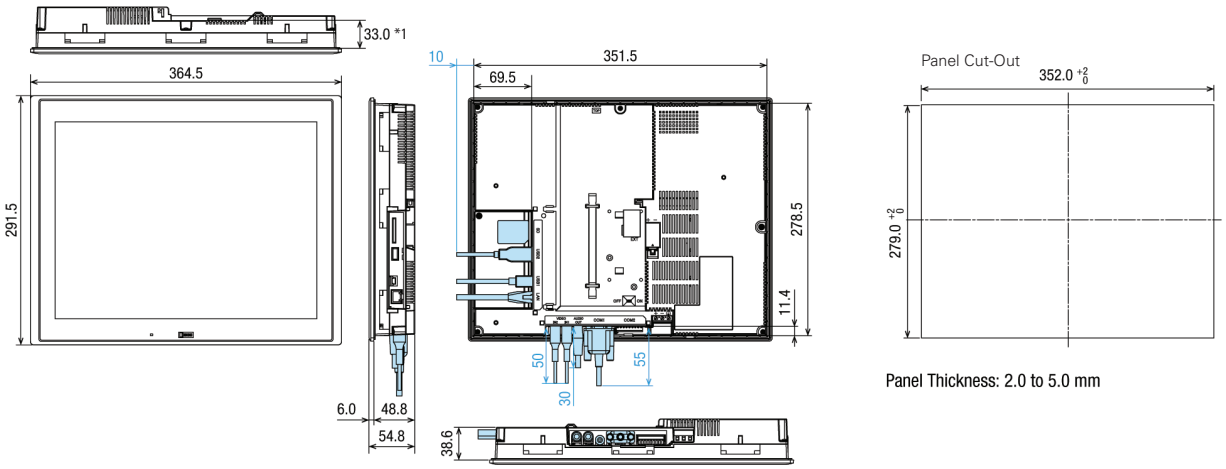

*1) Depth from the expansion module mounting surface.

Note 1: Dimensions in blue show the mounting dimensions of the cable. Note 2: The tightening torque of HG2G-V5 is 0.2 to 0.3Nm and HG3G/4G/5G-V is 0.5 to 0.6Nm.

Note 3: Do not tighten with excessive force, otherwise the HG*G-V and screen may become distorted and waterproof characteristics may be lost.

IDEC Corporation • 1175 Elko Drive • Sunnyvale, CA 94089 • 800-262-IDEC (4332) • Fax: 408-745-5258 • www.IDEC.com/usa

©2019 IDEC Corporation. All Rights Reserved. HG9Y-DS200-2 5K 6/19

Data sheet

Power supply CP-E 24/5.0
Primary switch mode power supply

Section 2.1.3
PLC Power Supply

The CP-E range offers enhanced functionality while the number of different types has been considerably reduced. Now all power supply units can be operated at an ambient temperature of up to +70 °C.

2CDC 271 024 F0008

Characteristics
- Rated output voltage 24 V DC
- Output voltage adjustable via front-face rotary potentiometer “OUTPUT Adjust”
- Rated output current 5 A
- Rated output power 120 W
- Supply range 115/230 V AC (90-132 V AC, 180-264 V AC, 210-375 V DC), auto select
- Typical efficiency of 86 %
- Low power dissipation and low heating
- Free convection cooling (no forced cooling with ventilators)
- Ambient temperature range during operation -35...+70 °C
- Open-circuit, overload and short-circuit stable
- Integrated input fuse
- Redundancy unit CP-A RU offering true redundancy, available as accessory
- Signalling contact “13-14” (solid-state) for output voltage OK
- LEDs for status indication

Approvals
UL 508, CAN/CSA C22.2 No.107.1 [1)]

ANSI/ISA-12.12, CAN/CSA C22.2 No. 213 (Class I, Div. 2, hazardous locations)

UL 60950, CAN/CSA C22.2 No.60950 [1)]

EAC

CCC [1)]

[1)] Approval refers to rated input voltage U_{in}

Marks
CE

RCM

Order data

Type	Input voltage range	Rated output voltage / current	Order code
CP-E 24/5.0	90-132 V AC / 180-264 V AC 210-375 V DC	24 V DC / 5 A	1SVR 427 034 R0000

Order data – accessories

Type	Description	Order code
CP-A RU	Redundancy unit The CP-A RU provides decoupling of two CP-E power supply units ≤ 40 V and ≥ 5 A.	1SVR 427 071 R0000

Functions

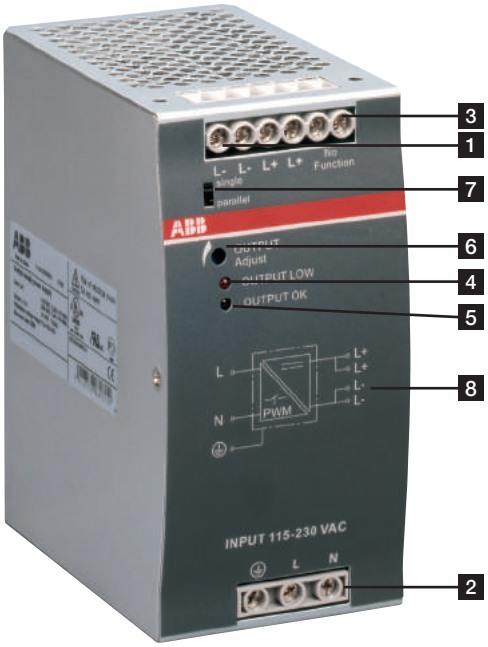

1 OUTPUT L+, L+, L-, L-:

terminals – output

2 INPUT L, N, PE:

terminals – input

3 13-14:

terminals – signalling contact

4 OUTPUT LOW:

red LED – output voltage too low

5 OUTPUT OK:

green LED – output voltage OK

6 OUTPUT Adjust:

potentiometer – adjustment of the output voltage

7 single/parallel:

sliding switch – adjustment of single or parallel operation

8 Circuit diagram

Application

The primary switch mode power supply offers two voltage input ranges. This enables the supply with AC or DC. Furthermore it is equipped with two generous capacitors, which ensure mains buffering of at least 30 ms (at 230 V AC). That is why the devices can be used worldwide also in high fluctuating networks and battery-powered plants.

Operating mode

By means of the potentiometer “OUTPUT Adjust” the output voltage can be adjusted within a range of 22.5 to 28.5 V DC. Thus, the power supply can be optimally adapted to the application, e.g. compensating the voltage drop caused by a long line length.

The green LED “OUTPUT OK” is lightening during proper operation.
The red LED “OUTPUT LOW” is lightening when the output voltage is too low.

Switch “single/parallel” for selection of single or parallel operation.

Signalling contact 13-14 (max. 60 V DC / 0.3 A) is ON when the output voltage is more than 75 %.

Technical data

Data at T_a = 25 °C, U_{in} = 230 V AC and rated values, unless otherwise indicated

Input circuits

Supply circuits		
Rated input voltage U_{in}	L,N	115 / 230 V AC auto select
Input voltage range	AC	90-132 V, 180-264 V
	DC	210-375 V
Frequency range	AC	47-63 Hz
Typical input current	at 115 V AC	2.2 A
	at 230 V AC	0.83 A
Typical power consumption		140 W
Inrush current limiting	at 115 V AC	24 A (max. 5 ms)
	at 230 V AC	48 A (max. 5 ms)
Discharge current	input / output	0.25 mA
	input / PE	3.5 mA
Power failure buffering time	at 115 V AC	min. 25 ms
	at 230 V AC	min. 30 ms
Internal input fuse		3.15 A slow-acting / 250 V AC
Power factor correction (PFC)		yes, passive, 0.7

User interface

Indication of operational states		
Output voltage	OUTPUT OK: green LED	⎍: output voltage OK
	OUTPUT LOW: red LED	⎍: output voltage too low

Output circuit

Rated output voltage	L+, L+, L-, L-	24 V DC
Tolerance of the output voltage		0...+1 %
Adjustment range of the output voltage		22.5-28.5 V DC
Rated output power		120 W
Rated output current I_r	$T_a \leq 60$ °C	5 A
Derating of the output current	60 °C < $T_a \leq 70$ °C	2.5 %/°C
Signalling contact for output voltage OK	13-14	solid-state (max. 60 V DC, 0.3 A)
Minimum fuse rating to achieve short-circuit protection	13-14	≥ 60 V DC, ≤ 0.3 A fast-acting
Maximum deviation with	load change statical	±1 % (single mode) ±5 % (parallel mode)
	change of output voltage within the input voltage range	±0.5 %
Control time		< 2 ms
Starting time after applying the supply voltage	at I_r	max. 1 s
	with 3500 µF	max. 1.5 s
Rise time	at I_r	max. 150 ms
	with 3500 µF	max. 500 ms
Fall time		max. 150 ms
Residual ripple and switching peaks	BW = 20 MHz	50 mV
Parallel connection		configurable, to increase power, up to 3 devices, min. 0.1 I_r – max. 0.9 I_r
Series connection		yes, to increase voltage, max. 2 devices
Resistance to reverse feed		max. 35 V DC

Output circuit – no-load, overload and short-circuit behaviour

Characteristic curve of output	U/I characteristic curve
Short-circuit protection	continuous short-circuit proof
Short-circuit behaviour	continuation with output power limiting
Overload protection	output power limiting
No-load protection	continuous no-load stability
Starting of capacitive loads	3500 µF

General data

Power dissipation		typ. 20 W
Efficiency		typ. 86 %
Duty time		100 %
Dimensions (W x H x D)		63.2 x 123.6 x 123.6 mm (2.49 x 4.87 x 4.87 in)
Weight		1 kg (2.20 lb)
Material of housing		Plastic
Mounting		DIN rail (IEC/EN 60715), snap-on mounting without any tool
Mounting position		horizontal
Minimum distance to other units	horizontal / vertical	25 mm / 25 mm (0.98 in / 0.98 in)
Degree of protection	housing / terminals	IP20 / IP20
Protection class		I

Electrical connection – input circuit / output circuit

Connecting capacity	fine-strand with wire end ferrule	0.2-4 mm² (24-11 AWG)
	fine-strand without wire end ferrule	0.2-6 mm² (24-10 AWG
	rigid	
Stripping length		8 mm (0.31 in)
Tightening torque		1.0 Nm (9 lb.in) / 0.62 Nm (5.5 lb.in)

Environmental data

Ambient temperature range	operation	-35...+70 °C (-31...+158 °F)
	rated load	-35...+60 °C (-31...+140 °F)
	storage	-40...+85 °C (-40...+185 °F)
Damp heat		95 % RH, without condensation
Vibration (sinusoidal) (IEC/EN 60068-2-6)		10-500 Hz, 2 G, along X, Y, Z each axis, 60 min. for each axis
Shock (half-sine) (IEC/EN 60068-2-27)		15 G, 11 ms, 3 axis, 6 faces, 3 times for each face

Isolation data

Rated insulation voltage U_i	input / output	3 kV AC
	input / PE	1.5 kV AC
	output / PE	0.5 kV AC; 0.71 kV DC
	signalling contact / PE	0.5 kV DC
Pollution degree		2
Overvoltage category		II

Standards / Directives

Standards	IEC/EN 60950-1
Low Voltage Directive	2014/35/EU
Protective low voltage	SELV (IEC/EN 60950-1)
EMC Directive	2014/30/EU
RoHS Directive	2011/65/EU

Electromagnetic compatibility

Interference immunity to		IEC/EN 61000-6-2
electrostatic discharge	IEC/EN 61000-4-2	Level 4 (air discharge 15 kV / contact discharge 8 kV)
radiated, radio-frequency, electromagnetic field	IEC/EN 61000-4-3	Level 3 (10 V/m)
electrical fast transient / burst	IEC/EN 61000-4-4	Level 4 (4 kV / 5 kHz)
surge	IEC/EN 61000-4-5	L-L Level 3 (2 kV) / L-PE Level 4 (4 kV)
conducted disturbances, induced by radio-frequency fields	IEC/EN 61000-4-6	Level 3 (10 V)
power frequency magnetic fields	IEC/EN 61000-4-8	Level 4 (30 A/m)
voltage dips, short interruptions and voltage variations	IEC/EN 61000-4-11	dip: >95 % 10 ms / >30 % 500 ms interruptions: >95 % 5000 ms
Interference emission		IEC/EN 61000-6-3
high-frequency radiated	IEC/CISPR 22, EN 55022	Class B
high-frequency conducted	IEC/CISPR 22, EN 55022	Class B
limits for harmonic current emissions	IEC/EN 61000-3-2	Class D

data
SHEET

EISK8-100T Skorpion Switch

Cost Effective, 100 Mbps-speed — Compact Size

The EISK8-100T Skorpion Switch is an eight-port unmanaged Ethernet switch that provides 100 Mbps performance on all ports to accommodate a range of control devices and workstations commonly found in an automation project. For 10 Mbps legacy devices, the switch will automatically reduce its port-speed accordingly. This low-cost compact unit utilizes a rugged metal enclosure and is intended for installation in control panels using DIN-rail mounting.

This is a plug-and-play Ethernet switch that requires no configuration. All ports automatically configure their data rate and duplex using the Auto-negotiation protocol. Depending on the capability of the link partner, communication is set at 10 or 100 Mbps and at either half- or full-duplex. Each port accommodates either a straight-through or crossover cable using the Auto-MDIX protocol.

The unit is powered from a choice of low-voltages (AC or DC). Redundant power connections are provided for back-up power schemes. LEDs assist in troubleshooting.

- Plug-and-Play operation
- 10BASE-T/100BASE-TX
- Shielded RJ-45 connectors
- Auto-negotiation of speed and duplex
- Auto-MDIX supports cable inversion

- DIN-rail mounting
- Rugged metal enclosure
- Diagnostic LEDs
- Enhanced EMC compliance
- UL 508 listed, c-UL listed, CE mark
- 24 VAC/VDC powered

CTRLink®

Overview

The Skorpion Switch is intended for control panel installations where DIN-rail space is at a premium by requiring a width of only 41 mm of rail space. A metal DIN-rail clip attached to the aluminium enclosure can survive the toughest installation. A writable side label allows the installer an opportunity to document field cabling locations right on the unit.

The switch can powered from either a 10–36 VDC or 24 VAC (±10%) source. Its half-wave rectified low-voltage power supply allows the sharing of power with other 24 VAC/VDC control devices from a common power supply. With redundant power connections, a backup power scheme can be supported. A removable power connector facilitates the servicing of the unit.

LEDs built into the connector indicate data rate and activity on each of the five ports — greatly assisting in troubleshooting connection issues.

The switch is UL 508 Listed and c-UL Listed for Industrial Control Equipment. It complies with CFR 47 Part 15 Class A, and carries the CE Mark. It is RoHS compliant.

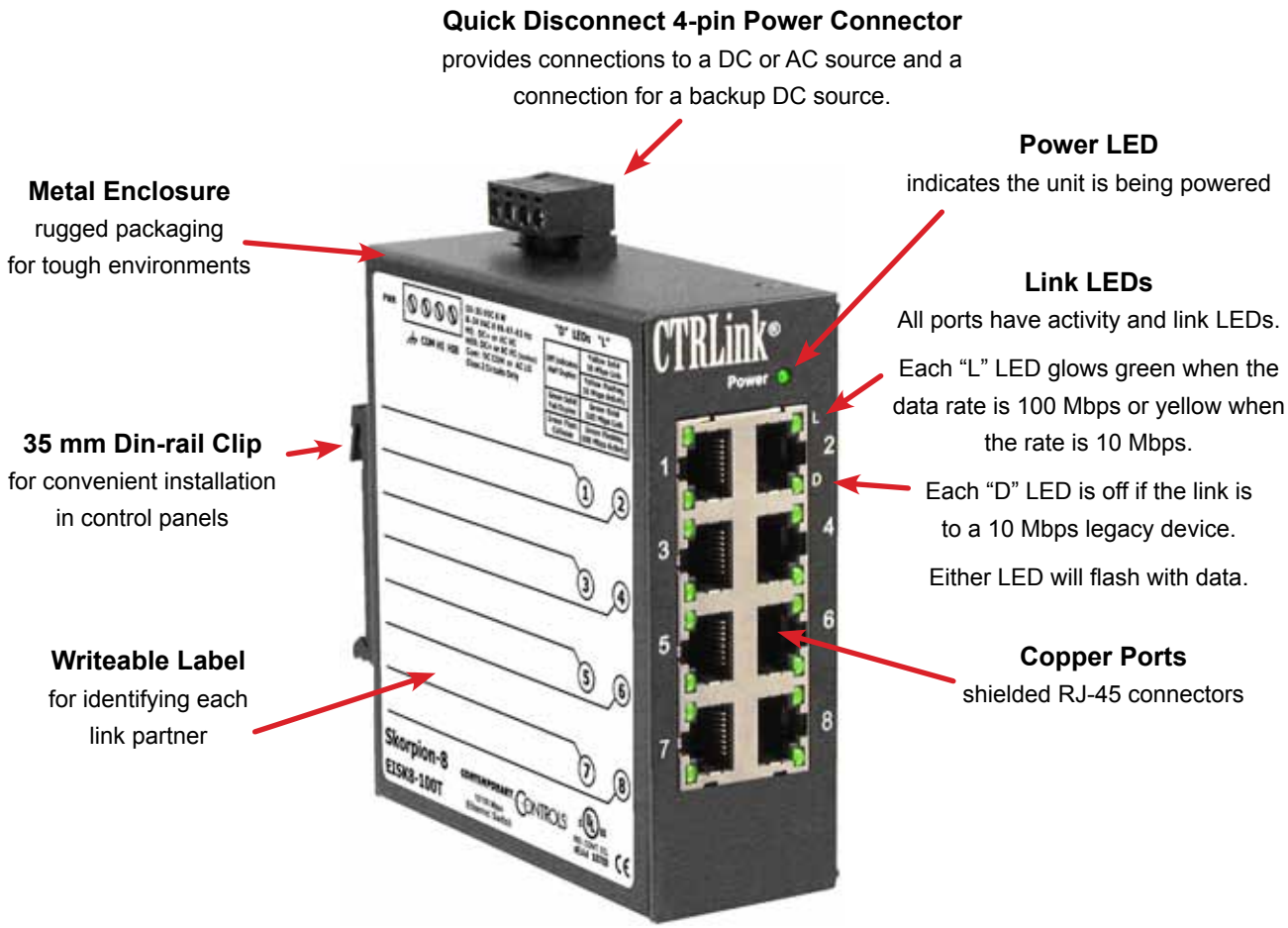

Specifications

Power Requirements	10–36 VDC 5 W or 24 VAC ±10% 7 VA 47–63 Hz
Operating Temperature	0°C to 60°C
Storage Temperature	–40°C to 85°C
Relative Humidity	10–95%, non-condensing
Protection	IP30
Mounting	TS-35 DIN-rail
Shipping Weight	1 lb (0.45 kg)
Ethernet Communications	IEEE 802.3 10/100 Mbps data rate using RJ-45 connectors, 100 m (max)
LEDs	Power: Green = power OK "L" LEDs: Green = 100 Mbps communication established Yellow = 10 Mbps communication established Flashing = data transmissions occurring "D" LEDs: Green = Full-duplex communication established Off = Half-duplex communication established
Regulatory Compliance	CE Mark; CFR 47, Part 15 Class A; RoHS; UL 508 Industrial Control Equipment

RJ-45 Connector Pin Assignments

Pin	Function
1	TD+
2	TD–
3	RD+
4	Not Used
5	Not Used
6	RD–
7	Not Used
8	Not Used

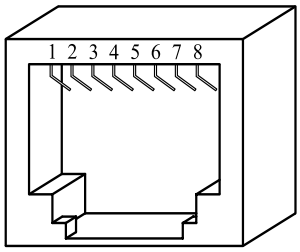

Mechanical Drawing

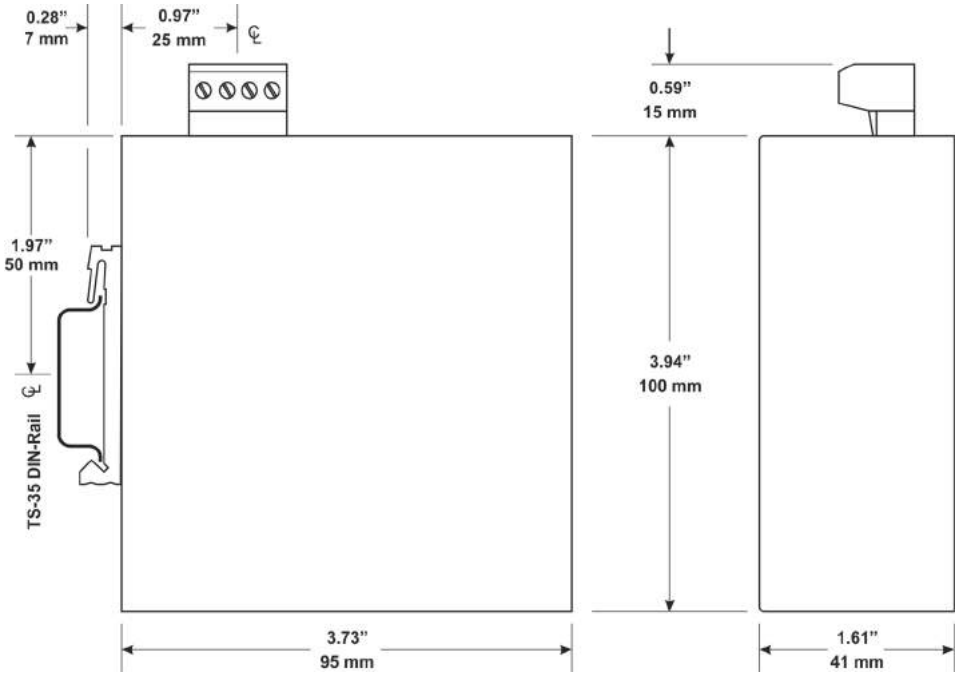

Power Considerations

Applied voltage must be in the specified range and deliver a current commensurate with power consumption. The recommended size for solid power conductors is 16–20 AWG; and for stranded conductors use 16–18 AWG. Zero volts (COM) is isolated from chassis (earth). Input connections are reverse-polarity protected.

Input power: 10–36 VDC or 24 VAC ± 10%, 47–60 Hz.
Connecting chassis to earth or using a backup source is always optional.

All options shown are for use in Class 2 circuits if applied voltage is limited to 30V DC.

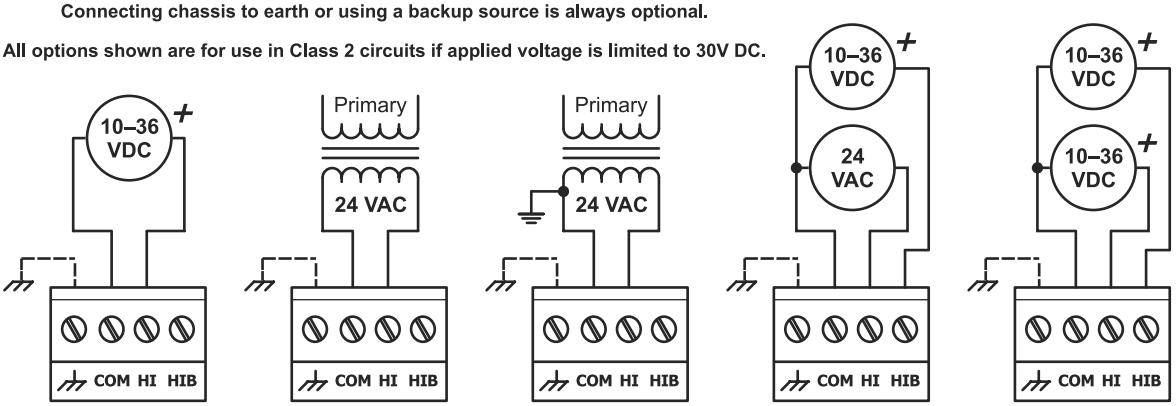

DC Powered | AC Powered | AC Powered with Grounded Secondary | AC Powered with DC Backup | Redundant DC Powered

Typical Switch Installations

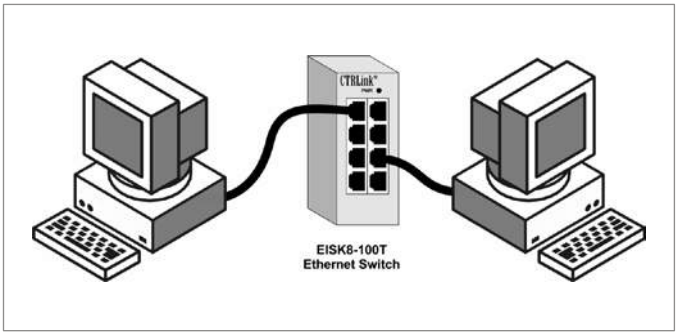

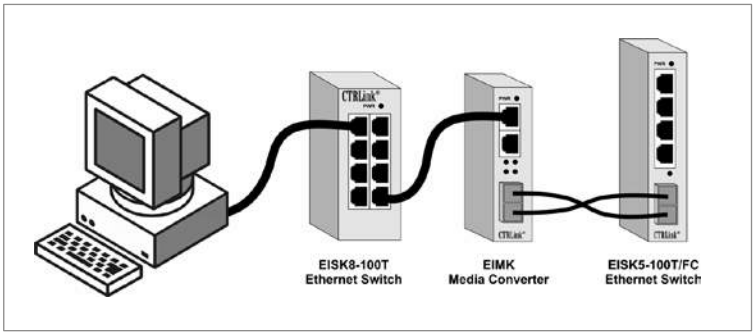

Ordering Information

Model	*Description*
EISK8-100T	Skorpion 8-Port 10/100Mbps Switch

United States
Contemporary Control Systems, Inc.
2431 Curtiss Street
Downers Grove, IL 60515
USA

Tel: +1 630 963 7070
Fax:+1 630 963 0109

info@ccontrols.com
www.ccontrols.com

China
Contemporary Controls (Suzhou) Co. Ltd
11 Huoju Road
Science & Technology
Industrial Park
New District, Suzhou
PR China 215009

Tel: +86 512 68095866
Fax: +86 512 68093760

info@ccontrols.com.cn
www.ccontrols.asia

United Kingdom
Contemporary Controls Ltd
14 Bow Court
Fletchworth Gate
Coventry CV5 6SP
United Kingdom

Tel: +44 (0)24 7641 3786
Fax:+44 (0)24 7641 3923

info@ccontrols.co.uk
www.ccontrols.eu

Germany
Contemporary Controls GmbH
Fuggerstraße 1 B
04158 Leipzig
Germany

Tel: +49 341 520359 0
Fax: +49 341 520359 16

info@ccontrols.de
www.ccontrols.eu

MAX BR1 Mini

Section 2.1.5
Wireless
Modem

peplink | PEPWAVE

Industrial-Grade 4G LTE Router

Rugged 4G LTE Router with Add-On Automatic Failover

The BR1 Mini offers redundant SIM slots with automatic switching, DC or terminal block power capability, advanced GPS fleet tracking, and remote management, all packed into a durable metal enclosure.

Compatible With:

verizon, Sprint, at&t, T-Mobile, ROGERS, TELUS, Bell, U.S. Cellular

*Selected models

Out of Band Management, IOT, and M2M Telemetry

Manage and configure your networking devices securely even if the primary line is not available. Gather data from meters, sensors and other remote equipment via RS-232 serial port adapter.

Add-On WAN Capabilities

The MAX BR1 Mini has an optional license that enables Ethernet and Wi-Fi WAN for failover between different WAN connections.

Redundant SIM Slots for Multiple Carriers

Redundant SIM slots with automatic switching for reliable networking. You can set the BR1 Mini to automatically switch SIM cards when you're about to exceed a data cap. It also allows you travel across borders without changing SIM cards manually.

Support for T-Mobile (Band 12) and Sprint* (Band 26)

The BR1 Mini LTE-A supports Band 12 (700 Mhz) for T-Mobile and Band 26 (850 Mhz) for Sprint*. These bands penetrate buildings extremely well and also cover longer distances.

Fleet Tracking and Management

With built-in GPS fleet tracking and InControl cloud-based management, you can keep tabs on location and manage your mobile network from any Internet-connected device.

Terminal Block for Secure Power Supply

The MAX BR1 Mini is equipped with a terminal block for secure power installation in vehicles and other locations.

* Sprint Certification Pending

MAX BR1 Mini

Industrial-Grade 4G LTE Router

Specifications

	MAX BR1 Mini
WAN Interface	1x 10/100M Ethernet Port 1x Embedded LTE Modem with Redundant SIM Slot
LAN Interface	1x 10/100M Ethernet Port
Wi-Fi Interface	802.11b/g/n Wi-Fi WAN or AP
Router Throughput	100 Mbps
Recommended Users	60
LTE Modem	Downlink/Uplink Datarate: 150Mbps/50Mbps
LTE-A Modem	Downlink/Uplink Datarate: 300Mbps/50Mbps
Cellular and GPS Antenna Connector	2x SMA Antenna Connectors 1x SMA GPS Antenna Connector 1x Wi-Fi Connector
Power Input	DC Jack/Terminal Block: 12V – 28V DC Passive PoE Input (WAN Port, 12V – 28V DC)
Power Consumption	12W (max.)
Dimensions	4.1 x 4.3 x 1.2 inches 105 x 110 x 30 mm
Weight	0.54 pound 244 grams
Operating Temperature	-40° – 149°F -40° – 65°C
Humidity	15% – 95% (non-condensing)
Certifications	FCC, CE, RoHS, E-Mark, IC, EN 61373: Shock and Vibration Resistance, EN 50155: Railway Applications - Electronic Equipment used on Rolling Stock, EN 61000: Electromagnetic Compatibility
Warranty	1-Year Limited Warranty

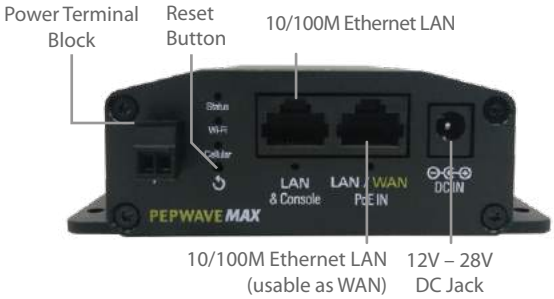

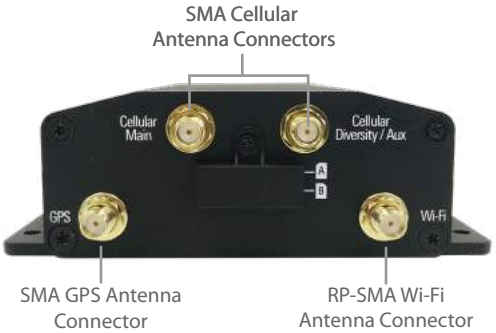

Ordering Information

	Product Code	Carrier/Region	Embedded Modem	Standard	4G Bands	3G Bands
LTE	MAX-BR1-MINI-LTE-US-T	United States	1	LTE Cat. 4	B2, B4, B5, B12, B13	HSPA+: B2, B5
LTE	MAX-BR1-MINI-LTE-E-T	Europe/International	1	LTE Cat. 4	4G LTE: B1, B3, B5, B7, B8, B20, B38 (TDD), B40(TDD), B41 (TDD)	WCDMA/HSPA+/DC-HSPA+: B1, B5, B8
LTEA	MAX-BR1-MINI-LTEA-W-T	Americas/EMEA	1	LTE Cat. 6	4G LTE-A: B1, B2, B3, B4, B5, B7, B8 , B12, B13, B20, B25, B26, B29, B30, B41	2500WCDMA/HSPA+/DC-HSPA+: B1, B2, B3, B4, B5, B8
LTEA	MAX-BR1-MINI-LTEA-P-T	Asia Pacific	1	LTE Cat. 6	B1, B3, B5, B7, B8, B18, B19, B21, B28, B38, B39, B40, B41	WCDMA/HSPA+/DC-HSPA+: B1, B5, B6, B8, B9, B19 TD-SCDMA: B39

Product Code	Description
MAX-BR1-MINI-LC-FS	Failover software license and related feature set for BR1-MINI, enables Ethernet and Wi-Fi WAN.
ACW-102	PoE injector for delivering passive PoE power to the BR1 Mini

peplink | PEPWAVE

www.peplink.com

©Peplink International. All rights reserved.

Ref no.: max-br1-mini-201906-v11

2.2

MOTOR CONTROLS

FR-F800 Product Details

FR-F800-E Series

The FR-F800-E is a pump and fan control VFD that combines performance, accuracy and reliability with embedded Ethernet based communications to enhance overall system flexibility. With 100Mbps Ethernet TCP/IP and BACnet/IP connectivity as the standard, the FR-F800-E provides an increased ability for remote system monitoring, parameter adjustments and easy integration into an existing network environments.

- **NEMA 1 / UL-1 Rated:** FR-F800 is Plenum-Rated and can be mounted as a stand-alone unit when required – no need to provide a separate enclosure*
- **Ethernet Communications as Standard:** Communicate with Modbus TCP/IP or CC-Link IE Field Basic communications networks at a speed of 100Mbps without the need for an extra option card.
- **Built-in Filter:** Limits the effects of radio noise on sensitive equipment
- **Drive to Drive Communications:** Utilize the internal PLC to communicate without a master PLC controller allowing the drives to work together as a team.
- **Optimum Excitation Control:** FR-F800 uses vector drive technology to calculate motor load and ensures maximum energy savings, even if motor loading changes
- **3 Programmable Skip Frequencies:** Avoid points of mechanical resonance in ducting and pipework.
- **Drive Settings can be Uploaded or Downloaded:** Using a standard USB memory stick
- **Real-time Clock:** Drive trip messages are 'time stamped' for diagnostic purposes**
- **Bi-Directional Coasting Motor Restart:** FR-F800 can safely 'catch' and control a motor which is already spinning (in either direction) on start-up.

Notes
* Drive Sizes up to 40HP
** Requires the use of the FR-LU08 keypad

- **Advanced PID Control Features:**
  - 2 Independent PID loops
  - Pre-Charge Mode
  - Sleep Mode
  - Multiple Motor control (up to 4)
  - Selectable response to 'loss of signal'
- Control of high efficiency IPM motors
- **Advanced Power Monitoring Capability:** Including pulse train output
- **UL-Approved Rating:** For single phase operation (coming soon)
- **Out-of-Range Warning System:** Detects broken drive belts and other potential mechanical problems
- **Automatic IP Address Detection:** Automatically detect the IP address of all connected drives, quickly enabling connection and programming using FR-Configurator software.
- **Remote Operation:** Communicate with a drive remotely for commissioning, monitoring or troubleshooting anytime from anywhere.

FR-F800 Ratings, 240V Class

Model Number	AMPS for Duty		HP For Duty (NEC)		Frame Size	Weight (lbs)	Cooling Method	Protective Rating	Stocked Item
	SLD	LD	SLD	LD					
FR-F820-00046-E3N6	4.6	4.2	1	1	A	6	Self-Cooling	UL Type 1- Plenum Rated	S
FR-F820-00077-E3N6	7.7	7	2	2	B	6			S
FR-F820-00105-E3N6	10.5	9.6	3	3	C	9	Forced Air Cooling		S
FR-F820-00167-E3N6	16.7	15.2	5	5	C	9			S
FR-F820-00250-E3N6	25	23	7.5	7.5	C	9			S
FR-F820-00340-E3N6	34	31	10	10	D	17			S
FR-F820-00490-E3N6	49	45	20	15	D	17			S
FR-F820-00630-E3N6	63	58	20	20	E	20			S
FR-F820-00770-E3N6	77	70.5	25	25	F	37			S
FR-F820-00930-E3N6	93	85	30	30	F	37			S
FR-F820-01250-E3N6	125	114	40	40	F	37			S
FR-F820-01540-E360	154	140	60	50	G	48		IP00	S
FR-F820-01870-E360	187	170	60	60	H	92			S
FR-F820-02330-E360	233	212	75	75	H	92			S
FR-F820-03160-E360	316	288	125	100	K	119			S
FR-F820-03800-E3U6	380	346	150	125	L	163			S
FR-F820-04750-E3U6	475	432	150	150	L	163			-

Note: Drives in Shaded Area MUST be used together with FR-HEL DC Link Choke (sold separately).
SLD - 100% 60s, 120% 3s (inverse-time characteristics) at ambient temperature of 40°C.
LD - 120% 60s, 150% 3s (inverse-time characteristics) at ambient temperature of 50°C.

FR-HEL DC Link Chokes (sold separately)

Model Number	LD	SLD
FR-F820-03160-E360	FR-HEL-75K	FR-HEL-90K
FR-F820-03800-E3U6	FR-HEL-90K	FR-HEL-110K
FR-F820-04750-E3U6	FR-HEL-110K	FR-HEL-110K

FR-F800-E Ratings, 480V Class

Model Number	AMPS for Duty		HP For Duty (NEC)		Frame Size	Weight (lbs) (*1)	Cooling Method	Protective Rating	Stocked Item
	SLD	LD	SLD	LD					
FR-F840-00023-E3N6	2.3	2.1	1	1	C	8	Self - Cooling	UL Type 1 – Plenum Rated	S
FR-F840-00038-E3N6	3.8	3	2	2	C	8			S
FR-F840-00052-E3N6	5.2	4.8	3	3	C	8			S
FR-F840-00083-E3N6	8.3	7.6	5	5	C	9			S
FR-F840-00126-E3N6	12.6	11.5	7.5	7.5	C	9			S
FR-F840-00170-E3N6	17	16	10	10	D	17	Forced Air Cooling		S
FR-F840-00250-E3N6	25	23	15	15	D	17			S
FR-F840-00310-E3N6	31	29	20	20	E	20			S
FR-F840-00380-E3N6	38	35	25	25	E	20			S
FR-F840-00470-E3N6	47	43	30	30	F	37			S
FR-F840-00620-E3N6	62	57	40	40	F	37			S
FR-F840-00770-E360	77	70	60	50	G	51		IP00	S
FR-F840-00930-E360	93	85	60	60	H	90			S
FR-F840-01160-E360	116	106	75	75	H	90			S
FR-F840-01800-E360	180	144	150	100	H	95			S
FR-F840-02160-E3U6	216	180	150	150	J	114			S
FR-F840-02600-E3U6	260	216	200	150	J	121			S
FR-F840-03250-E3U6	325	260	250	200	L	156			S
FR-F840-03610-E3U6	361	325	300	250	L	172			S
FR-F840-04320-E3U6	432	361	350	300	M	257			S
FR-F840-04810-E3U6	481	432	400	350	M	257			S
FR-F840-05470-E3U6	547	481	450	400	N	365			S
FR-F840-06100-E3U6	610	547	500	450	N	365			S
FR-F840-06830-E3U6	683	610	550	500	N	365			S

Note 1: Weights of the drive and the CC2 modules are COMBINED. Drives in Shaded Area MUST be used together with FR-HEL-H DC Link Choke (sold separately)

480V FR-HEL-H DC Link Chokes (sold separately)

Model Number	LD	SLD
FR-F840-01800-E360	FR-HEL-H75K	FR-HEL-H90K
FR-F840-02160-E3U6	FR-HEL-H90K	FR-HEL-H110K
FR-F840-02600-E3U6	FR-HEL-H110K	FR-HEL-H132K
FR-F840-03250-E3U6	FR-HEL-H132K	FR-HEL-H160K
FR-F840-03610-E3U6	FR-HEL-H160K	FR-HEL-H185K
FR-F840-04320-E3U6	FR-HEL-H185K	FR-HEL-H220K
FR-F840-04810-E3U6	FR-HEL-H220K	FR-HEL-H250K
FR-F840-05470-E3U6	FR-HEL-H250K	FR-HEL-H280K
FR-F840-06100-E3U6	FR-HEL-H280K	FR-HEL-H315K
FR-F840-06830-E3U6	FR-HEL-H315K	FR-HEL-H355K

Model Number	AMPS for Duty		HP For Duty (NEC)		Frame Size	Weight (lbs) (*1)	Cooling Method	Protective Rating	Stocked Item
	SLD	LD	SLD	LD					
FR-F842-07700-E3U6 + FR-CC2-H355K-60	-	683	-	550	P+R	827	Forced Air Cooling	IP00	S
FR-F842-07700-E3U6 + FR-CC2-H400K-60	770	-	650	-	P+S	979			S
FR-F842-08660-E3U6 + FR-CC2-H400K-60	-	770	-	650	P+S	979			S
FR-F842-08660-E3U6 + FR-CC2-H450K-60	866	-	700	-	P+S	986			S
FR-F842-09620-E3U6 + FR-CC2-H450K-60	-	866	-	700	Q+S	1162			S
FR-F842-09620-E3U6 + FR-CC2-H500K-60	962	-	800	-	Q+S	1168			S
FR-F842-10940-E3U6 + FR-CC2-H500K-60	-	962	-	800	Q+S	1168			S
FR-F842-10940-E3U6 + FR-CC2-H560K-60	1094	-	900	-	Q+S	1168			S
FR-F842-12120-E3U6 + FR-CC2-H560K-60	-	1094	-	900	Q+S	1168			S
FR-F842-12120-E3U6 + FR-CC2-H630K-60	1212	-	1000	-	Q+S	1168			S

Note: Weights of the drive and the CC2 modules are COMBINED. Drives in Shaded Area MUST be used together with FR-HEL-H DC Link Choke (sold separately).
SLD- 100% 60s, 120% 3s (inverse-time characteristics) at ambient temperature of 40°C
LD- 120% 60s, 150% 3s (inverse-time characteristics) at ambient temperature of 50°C
Always install the FR-CC2-H converter unit (not required when the FR-HC2 high power factor converter is used)

FR-F800-E Ratings, 600V Class

Model Number (*3)	AMPS for Duty		Horsepower for Duty (NEC)		Frame Size	Weight (lbs)	Cooling Method	Protective Rating	Stocked Item
	SLD	LD	SLD	LD					
FR-F860-00027-E3N6	2.7	2.5	2	1.5	C	11.7	Self Cooling	Enclosed Type (UL-1 plenum rated)	S
FR-F860-00061-E3N6	6.1	5.6	5	3	C	12.8	Forced Air Cooling		S
FR-F860-00090-E3N6	9	8.2	7.5	5	C	12.8			S
FR-F860-00170-E3N6	17	16	15	10	D	15.4			S
FR-F860-00320-E3N6	32	27	30	25	E	19.8			S
FR-F860-00450-E3N6	45	41	40	40	F	37.4			S
FR-F860-00680-E360	68	62	60	60	H	79.2		Open Type (IP00)	S
FR-F860-01080-E360 (*1)	108	99	100	100	H	90.2			S
FR-F860-01440-E360 (*1)	144	131	150	125	J	114			S
FR-F860-01670-E360 (*1)	167	152	150	150	J	114			S
FR-F860-02430-E360 (*1)	243	221	250	200	J	121			S
FR-F860-02890-E360 (*1)	289	255	300	250	M	246			S
FR-F860-03360-E360 (*1)	336	304	350	300	M	253			S
FR-F860-04420-E360 (*1)	442	402	450	400	N	337			S
FR-F862-05450-E360 + FR-CC2-C355K-60 (*2)	545	496	550	500	P+R	810			S
FR-F862-06470-E360 + FR-CC2-C400K-60 (*2)	647	589	650	600	Q+S	920			S
FR-F862-08500-E360 + FR-CC2-C560K-60 (*2)	850	773	850	750	Q+S	1126			S

600V FR-HEL-C DC Link Chokes (sold separately)

Model Number	SLD	LD
FR-F860-01080-E360	FR-HEL-C75K	FR-HEL-C75K
FR-F860-01440-E360	FR-HEL-C90K	FR-HEL-C90K
FR-F860-01670-E360	FR-HEL-C110K	FR-HEL-C110K
FR-F860-02430-E360	FR-HEL-C185K	FR-HEL-C132K
FR-F860-02890-E360	FR-HEL-C220K	FR-HEL-C185K
FR-F860-03360-E360	FR-HEL-C280K	FR-HEL-C220K
FR-F860-04420-E360	FR-HEL-C280K	FR-HEL-C280K

Notes:
1. These drives MUST be used with a DC Link Choke (sold separately).
2. FR-F862 Drives are inverter stage only; use together with FR-CC2-C rectifier stage. Maximum Input and Output Current of FR-CC2 modules is the value shown. COMBINED weight shown.
3. The FR-F860 does not include a built-in parameter unit. The FR-DU08 or FR-LU08 is sold separately.

FR-F800-E General Specifications

Operation Specifications	Control Method		Soft-PWM control, high carrier frequency PWM control (selectable among V/F control (Optimum excitation control), Advanced magnetic flux vector control (Advanced optimum excitation control) and PM motor control)
	Output Frequency Range		0.2 to 590 Hz (The upper-limit frequency is 400 Hz under Advanced magnetic flux vector control, and PM motor control.)
	Frequency Setting Resolution	Analog Input	0.015 Hz/60 Hz (terminal 2, 4: 0 to 10 V/12 bits) 0.03 Hz/60 Hz (0 to 5 V/11 bits or 0 to 20 mA/approx. 11 bits for terminals 2 and 4, 0 to ±10 V/12 bits for terminal 1) 0.06 Hz/60 Hz (0 to ±5 V/11 bits for terminal 1)
		Digital Input	0.01Hz
	Frequency Accuracy	Analog Input	Within ±0.2% of the max. output frequency (25°C ±10°C)
		Digital Input	Within 0.01% of the set output frequency
	Voltage / Frequency Characteristics		Base frequency can be set from 0 to 590 Hz. Constant-torque/variable-torque pattern or adjustable 5 points V/F can be selected.
	Starting Torque	Induction Motor	120% 0.5 Hz (Advanced magnetic flux vector control)
		IPM Motor	50%
	Torque Boost		Manual torque boost
	Acceleration / Deceleration Time Setting		0 to 3600 s (acceleration and deceleration can be set individually), linear or S-pattern acceleration/deceleration mode, backlash countermeasures acceleration/deceleration can be selected.
	DC Injection Brake (Induction Motor)		Operation frequency (0 to 120 Hz), operation time (0 to 10 s), operation voltage (0 to 30%) variable
	Stall Prevention Operation Level		Activation range of stall prevention operation (SLD rating: 0 to 120%, LD rating: 0 to 150%). Whether to use the stall prevention or not can be selected. (V/F control, Advanced magnetic flux vector control)
	Frequency Setting Signal	Analog Input	Terminals 2 and 4: 0 to 10 V, 0 to 5 V, 4 to 20 mA (0 to 20 mA) are available. Terminal 1: -10 to +10 V, -5 to 5 V are available.
		Digital Input	Input using the setting dial of the operation panel or the parameter unit. Four-digit BCD or 16-bit binary (when used with option FR-A8AX)
	Start Signal		Forward and reverse rotation or start signal automatic self-holding input (3-wire input) can be selected.
	Input Signal		Low-speed operation command, Middle-speed operation command, High-speed operation command, Second function selection, Terminal 4 input selection, Jog operation selection, Output stop, Start self-holding selection, Forward rotation command, Reverse rotation command, Inverter reset The input signal can be changed using Pr.178 to Pr.189 (Input terminal function selection).
	Pulse Train Input		100kpps
	Operational Functions		Maximum and minimum frequency settings, multi-speed operation, acceleration/deceleration pattern, thermal protection, DC injection brake, starting frequency, JOG operation, output stop (MRS), stall prevention, regeneration avoidance, increased magnetic excitation deceleration, DC feeding (*1), frequency jump, rotation display, automatic restart after instantaneous power failure, electronic bypass sequence, remote setting, retry function, carrier frequency selection, fast response current limit, forward/reverse rotation prevention, operation mode selection, slip compensation, speed smoothing control, traverse, auto tuning, applied motor selection, RS-485 communication, Ethernet communication, PID control, PID pre-charge function, cooling fan operation selection, stop selection (deceleration stop/coasting), power-failure deceleration stop function, PLC function, life diagnosis, maintenance timer, current average monitor, multiple rating, test run, 24 V power supply input for control circuit, safety stop function, self power management, BACnet communication, PID gain tuning, cleaning, load characteristics storage, emergency drive (*1)
	Output Signals	Open Collector Output (Five Terminals) Relay Output (Two Terminals)	Inverter running, Up to frequency, Instantaneous power failure/undervoltage (*1), Overload warning, Output frequency detection, Fault. The output signal can be changed using Pr.190 to Pr.196 (Output terminal function selection). Fault codes of the inverter can be output (4 bits) from the open collector.
		Pulse Train Output (FM Type)	50 kpps
Indication	For Meter	Pulse Train Output (FM Type)	Max. 2.4 kHz: one terminal (output frequency) The monitored item can be changed using Pr.54 FM/CA terminal function selection.
		Current Output (CA Type)	Max. 20 mADC: one terminal (output frequency) The monitored item can be changed using Pr.54 FM/CA terminal function selection.
		Voltage Output	Max. 10 VDC: one terminal (output frequency) The monitored item can be changed using Pr.158 AM terminal function selection.
	Operation Panel (FR-DU08)	Operating Status	Output frequency, output current, output voltage, frequency setting value The monitored item can be changed using Pr.52 Operation panel main monitor selection.
		Fault Record	Fault record is displayed when a fault occurs. Past 8 fault records and the conditions immediately before the fault (output voltage/current/frequency/cumulative energization time/year/month/date/time) are saved.
Protective / Warning Function			Overcurrent trip during acceleration, Overcurrent trip during constant speed, Overcurrent trip during deceleration or stop, Regenerative overvoltage trip during acceleration, Regenerative overvoltage trip during constant speed, Regenerative overvoltage trip during deceleration or stop, Inverter overload trip (electronic thermal relay function), Motor overload trip (electronic thermal relay function), Heatsink overheat, Instantaneous power failure (*1) Undervoltage (*1), Input phase loss (*1, *2), Stall prevention stop, Loss of synchronism detection (*2), Upper limit fault detection, Lower limit fault detection, Brake transistor alarm detection(*1), Output side earth (ground) fault overcurrent, Output short circuit, Output phase loss, External thermal relay operation (*2), PTC thermistor operation (*2), Option fault, Communication option fault, Parameter storage device fault, PU disconnection, Retry count excess (*2), CPU fault, Operation panel power supply short circuit, 24 VDC power fault, Abnormal output current detection (*2), Inrush current limit circuit fault (*1) Ethernet communication fault (*2), Analog input fault, USB communication fault, Safety circuit fault, Overspeed occurrence (*2), 4 mA input fault (*2), Pre-charge fault (*2), PID signal fault (*2), Internal circuit fault, User definition error in the PLC function. Fan alarm, Stall prevention (overcurrent), Stall prevention (overvoltage), Regenerative brake pre-alarm (*1, *2), Electronic thermal relay function pre-alarm, PU stop, Parameter copy, Safety stop, Maintenance timer 1 to 3 (*2), USB host error, Operation panel lock (*2), Password locked (*2), Parameter write error, Copy operation error, 24 V external power supply operation, Load fault warning, Emergency drive in operation (*1), Continuous operation during communication fault, Ethernet communication fault
Environment	Ambient Temperature		-10°C to +50°C (non-freezing) (LD rating) -10°C to +40°C (non-freezing) (SLD rating)
	Ambient Humidity		With circuit board coating (conforming to IEC60721-3-3 3C2/3S2): 95% RH or less (non-condensing) Without circuit board coating: 90% RH or less (non-condensing)
	Storage Temperature (*3)		-20°C to +65°C
	Atmosphere		Indoors (without corrosive gas, flammable gas, oil mist, dust and dirt, etc.)
	Altitude / Vibration		Maximum 1000 m above sea level (*4), 5.9 m/s² or less (*5) at 10 to 55 Hz (directions of X, Y, Z axes)

Notes:

1. Available only for the standard model.
2. This protective function is not available in the initial status.
3. Temperature applicable for a short time, e.g. in transit.
4. For the installation at an altitude above 1,000 m (up to 2,500 m), derate the rated current 3% per 500 m.
5. 2.9 m/s² or less for the FR-F840-04320(185K) or higher.

FR-F800 Series Terminal Connection Diagram (Version with 0-20mA Analog Output Signal)
CA Type

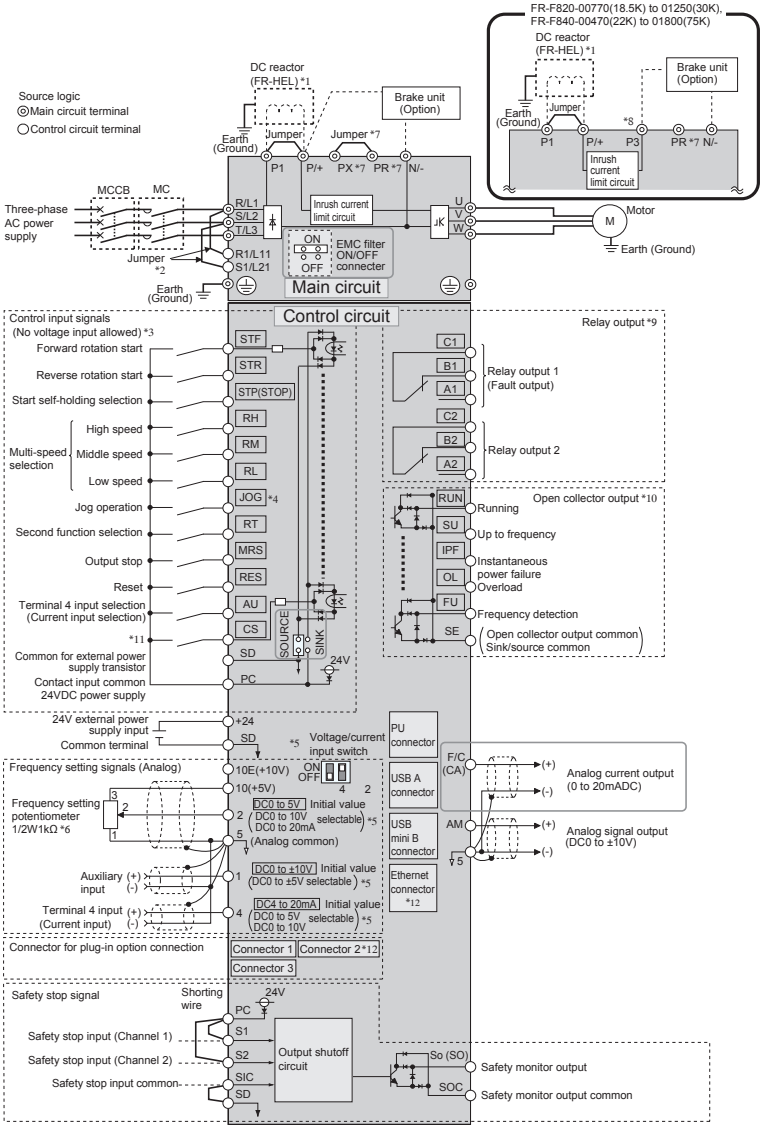

Notes:

1. For the FR-F820-03160(75K) or higher, the FR-F840-01800(75K) or higher, always connect a DC reactor (FR-HEL), which is available as an option. (To select a DC reactor, refer to the User Guide, and select one according to the applicable motor capacity.) When a DC reactor is connected to the FR-F820-02330(55K) or lower or the FR-F840-01160(55K) or lower, if a jumper is installed across terminals P1 and P/+, remove the jumper before installing the DC reactor.
2. When using separate power supply for the control circuit, remove the jumper between R1/L11 and S1/L21.
3. The function of these terminals can be changed with the input terminal assignment (Pr.178 to Pr.189).
4. Terminal JOG is also used as the pulse train input terminal. Use Pr.291 to choose JOG or pulse.
5. Terminal input specifications can be changed by analog input specification switchover (Pr.73, Pr.267). To input a voltage, set the voltage/current input switch OFF. To input a current, set the voltage/current input switch ON. Terminals 10 and 2 are also used as a PTC input terminal. (Pr.561) (Refer to the FR-F800 Instruction Manual (Detailed).)
6. It is recommended to use 2 W 1 kΩ when the frequency setting signal is changed frequently.
7. Do not use terminals PR and PX. The jumper may or may not be attached depending on the inverter.
8. Do not connect the DC power supply (under DC feeding mode) to terminal P3.
9. The function of these terminals can be changed with the output terminal assignment (Pr.195, Pr.196).
10. The function of these terminals can be changed with the output terminal assignment (Pr.190 to Pr.194).
11. No function is assigned in the initial status. Assign the function using Pr.186 CS terminal function selection.
12. The option connector 2 cannot be used because the Ethernet board is installed in the initial status. The Ethernet board must be removed to install a plug-in option to the option connector 2. (However, Ethernet communication is disabled in that case.)

ADDITIONAL NOTES:

- To prevent a malfunction due to noise, keep the signal cables 10 cm or more away from the power cables. Also, separate the main circuit cables at the input side from the main circuit cables at the output side.
- After wiring, wire offcuts must not be left in the inverter. Wire offcuts can cause an alarm, failure or malfunction. Always keep the inverter clean. When drilling mounting holes in an enclosure etc., take caution not to allow chips and other foreign matter to enter the inverter.
- Set the voltage/current input switch correctly. Incorrect setting may cause a fault, failure or malfunction.

FR-F802 Series Terminal Connection Diagram (Version with 0-20mA Analog Output Signal)

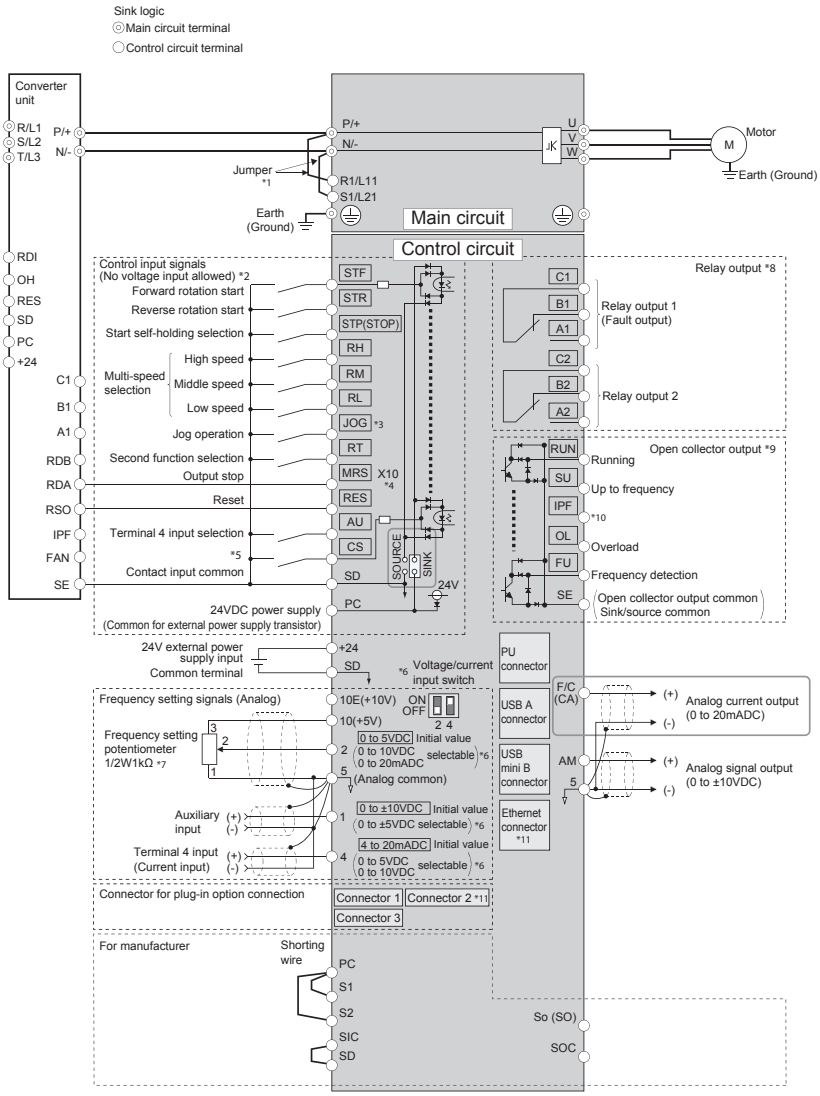

Notes:

1. Terminals R1/L11 and S1/L21 are connected to terminals P/+ and N/- with a jumper respectively. When using separate power supply for the control circuit, remove the jumpers from R1/L11 and S1/L21.
2. The function of these terminals can be changed with the input terminal assignment (Pr.178 to Pr.189).
3. Terminal JOG is also used as the pulse train input terminal. Use Pr.291 to choose JOG or pulse.
4. The X10 signal (NC contact input specification) is assigned to the terminal MRS in the initial setting. Set Pr.599 = "0" to change the input specification of the X10 signal to NO contact.
5. No function is assigned in the initial setting. Use Pr.186 for function assignment.
6. Terminal input specifications can be changed by analog input specification switchover (Pr.73, Pr.267). To input a voltage (0 to 5 V/0 to 10 V), set the voltage/current input switch OFF. To input a current (4 to 20 mA), set the voltage/current input switch ON. Terminals 10 and 2 are also used as a PTC input terminal. (Pr.561)
7. It is recommended to use 2 W 1 kΩ when the frequency setting signal is changed frequently.
8. The function of these terminals can be changed with the output terminal assignment (Pr.195, Pr.196).
9. The function of these terminals can be changed with the output terminal assignment (Pr.190 to Pr.194).
10. No function is assigned in the initial setting. Use Pr.192 for function assignment.
11. The option connector 2 cannot be used because the Ethernet board is installed in the initial status. The Ethernet board must be removed to install a plug-in option to the option connector 2. (However, Ethernet communication is disabled in that case.)

ADDITIONAL NOTES

- To prevent a malfunction due to noise, keep the signal cables 10 cm or more away from the power cables. Also, separate the main circuit cables at the input side from the main circuit cables at the output side.
- After wiring, wire offcuts must not be left in the inverter. Wire offcuts can cause an alarm, failure or malfunction. Always keep the inverter clean. When drilling mounting holes in an enclosure etc., take caution not to allow chips and other foreign matter to enter the inverter.
- Set the voltage/current input switch correctly. Incorrect setting may cause a fault, failure or malfunction.
- Terminals S1, S2, SIC, So (SO), and SOC are for manufacturer setting. Do not remove the shorting wires across terminals S1 and PC, terminals S2 and PC, and terminals SIC and SD. When the shorting wires are removed, the inverter does not operate.

FR-F800-E Dimensions – Frame Size Key Dimensions, 230V and 480V Drives

Series		Height in (mm)	Width in (mm)	Depth in (mm)
FR-F800	A	12.2 (310)	4.33 (110)	4.39 (112)
	B	12.2 (310)	4.33 (110)	4.98 (127)
	C	12.52 (318)	5.91 (150)	5.57 (141.6)
	D	12.76 (324)	8.66 (220)	6.69 (170)
	E	14.29 (363)	8.66 (220)	7.48 (190)
	F	20.37 (517)	9.84 (250)	7.48 (190)
	G	21.67 (550)	12.80 (325)	7.68 (195)
	H	21.67 (550)	17.13 (435)	9.84 (250)
	J	24.41 (620)	18.31 (465)	11.81 (300)
	K	27.56 (700)	18.31 (465)	9.84 (250)
	L	29.13 (740)	18.31 (465)	14.17 (360)
	M	39.76 (1010)	19.61 (498)	14.96 (380)
	N	39.76 (1010)	26.77 (680)	14.96 (380)

Series		Height in (mm)	Width in (mm)	Depth in (mm)
FR-F842	P	52.4 (1330)	21.3 (540)	17.3 (440)
	Q	62.2 (1580)	26.8 (680)	17.3 (440)
FR-CC2-H	R	52.4 (1330)	23.6 (600)	17.3 (440)
	S	62.2 (1580)	23.6 (600)	17.3 (440)

FR-F800-E Series Options and Accessories

Model Number	Description	Comments	Stocked Item
FR-A8AX	16 Bit Digital Input Card	BCD or Binary input	S
FR-A8AY	Digital Output / Extended Analog Output Card	2 extra 0-20 mA or 0-10V output signals	S
FR-A8AR	Relay Output Card	3 extra independent type 'C' relays	S
FR-A8ERS-60	A/F800 Series RS485 Option Card		S
FR-A8AC	A/F800 120V Control Option		S
FR-A8AN	A/F800 4-20mA I/O Card		S
FR-A8NL	A/F800 Series LONWorks Communication Card		S
FR-A8NC	CC-Link® Communications Card		S
A8NC-CON	CC-Link® Communications Card and Connectors		S
FR-A8ND	DeviceNet™ Communications Card		S
FR-A8NP	Profibus DPV0 Communications Card		S
A8NDPV1	Profibus DPV1 Communications Card		S
FR-A8NF	FL-Net Communications Card		S
A8N-XLT	Multi-protocol RS-485 Communications Card	(BACnet MS/TP), Siemens FLN (P1), Metasys N2	S
A8NEIP-2P	EtherNET™ IP Communications Card		S
A8NPRT-2P	Profinet® Communications Card		S
FR-A8NCE	CC-Link® IE Communications Card		S
A8NECT-2P	EtherCAT® Communications Card		S
A8NETH-2P	Multi-protocol EtherNET Communications Card	EtherNET IP, Modbus TCP/IP, Profinet, BACnet IP	S
FR-LU08	Liquid Crystal Operation Panel	Mount on VFD or panel	S
FR-LU08-01	LCD Operational Panel (Hand/Auto Key) HVAC		S
FR-PU07, FR-PU07-01	Parameter Unit	Mount on panel only. FR-PU07-1 is for HVAC	S
FR-PU07BB-L	Parameter Unit with Battery Back-up	Hand held. Can program unpowered drives	S
FR-CB20_ (_ = 1, 3 or 5)	Parameter Unit Connection Cable	1, 3 or 5 meter lengths	S
FR-ADP	Keypad Adaptor Unit	Connect FR-DU08 or FR-LU08 to FR-CB2	S
FR-A8TAT	Control Terminal Block Adaptor	Use FR-A500 or FR-A700 terminal block with FR-A800	S
FR-A8TR	Screw Terminal Block Option	Screw Terminal Block Option	S
FR-HC2	Zero Harmonic Controller	Available for all sizes	S
FR-HEL, FR-HEL-H, FR-HEL-C	DC Link Chokes	Use in accordance with selection guide	S
FR-CONFIGURATOR2	Software Setup Utility for 800 Series		S

Dimensions of REQUIRED DC Link Chokes (sold separately)

Model Number	Height in (mm)	Width in (mm)	Depth in (mm)	Weight (lbs)
FR-HEL-75K	13.39 (340)	5.91 (150)	7.87 (200)	37.4
FR-HEL-90K	13.39 (340)	5.91 (150)	7.87 (200)	41.8
FR-HEL-110K	15.75 (400)	6.89 (175)	7.87 (200)	44
FR-HEL-H75K	12.60 (320)	5.51 (140)	7.28 (185)	35.2
FR-HEL-H90K	13.39 (340)	5.91 (150)	7.48 (190)	44
FR-HEL-H110K	13.39 (340)	5.91 (150)	7.68 (195)	48.4
FR-HEL-H132K	15.94 (405)	6.89 (175)	7.87 (200)	57.2
FR-HEL-H160K	15.94 (405)	6.89 (175)	8.07 (205)	61.6
FR-HEL-H185K	15.94 (405)	6.89 (175)	9.45 (240)	63.8
FR-HEL-H220K	15.94 (405)	6.89 (175)	9.45 (240)	66
FR-HEL-H250K	17.32 (440)	7.48 (190)	9.84 (250)	77
FR-HEL-H280K	17.32 (440)	7.48 (190)	10.04 (255)	83.6
FR-HEL-H315K	19.49 (495)	8.27 (210)	9.84 (250)	92
FR-HEL-H355K	19.49 (495)	8.27 (210)	9.84 (250)	101
FR-HEL-C75K	12.6 (320)	5.5 (140)	7.3 (185)	35
FR-HEL-C90K	13.3 (340)	5.9 (150)	9.4 (240)	44
FR-HEL-C110K	13.3 (340)	5.9 (150)	9.4 (240)	51
FR-HEL-C132K	15.9 (405)	6.9 (175)	7.7 (195)	53
FR-HEL-C185K	15.9 (405)	6.9 (175)	9.4 (240)	70
FR-HEL-C220K	15.9 (405)	6.9 (175)	9.4 (240)	73
FR-HEL-C280K	17.3 (440)	7.5 (190)	9.8 (250)	88

2.3

Over Current and Short-circuit Protection

MINIATURE CIRCUIT BREAKERS

ST200M Datasheet

Supplementary protection acc. to CSA C22.2 No. 235 / UL 1077

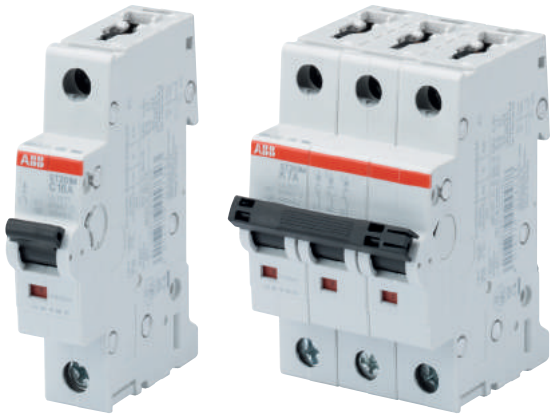

The ST200M miniature circuit breaker provides supplementary protection acc. to UL 1077 up to 480 Y/277 V AC and 125 V DC.

With a broad range of options and approvals acc. to the international standards UL, CSA and IEC, the ST 200 M is ideal for multiple applications and markets.
It is also fully compatible with System pro M compact® accessories.

—
01 ST201M / ST203M miniature circuit breakers

Features

- High performance MCB with interrupt rating up to 10 kA
- Certified for AC and DC use acc. to UL 1077 and CSA 22.2 No. 235
- Suitable for many applications due to a wide range of product types and available accessories
- High calibration temperature of 40 °C for reduced derating in ICP applications
- Short-circuit current rating (SC) U2 enables continuous high level short circuit protection
- Laser printing provides clear product information on device
- Clear contact position indication in red/green (“real CPI”)
- Unique, patented twin terminal for wiring up to 35 mm² with captive screws
- Field wiring available for most types
- Robust thermoplastic housing material for better protection against external influences

Standards and approvals

Standards	
UL 1077	
CSA 22.2 No. 235	
IEC/EN 60947-2	
Approvals	
UL 1077	US
CSA 22.2 No. 235	CA
VDE	DE
CCC	CN
EAC	RU

Miniature Circuit Breaker ST200M

Ordering data characteristic C

1 pole	Box Qty	Weight each (kg)	Rated Current	Part number
	10	0.115	0.5 A	ST201M-C0.5
			1.0 A	ST201M-C1
			1.6 A	ST201M-C1.6
			2.0 A	ST201M-C2
			3.0 A	ST201M-C3
			4.0 A	ST201M-C4
			5.0 A	ST201M-C5
			6.0 A	ST201M-C6
			7.0 A	ST201M-C7
			8.0 A	ST201M-C8
			10.0 A	ST201M-C10
			13.0 A	ST201M-C13
			15.0 A	ST201M-C15
			16.0 A	ST201M-C16
			20.0 A	ST201M-C20
			25.0 A	ST201M-C25
			30.0 A	ST201M-C30
			32.0 A	ST201M-C32
			35.0 A	ST201M-C35
			40.0 A	ST201M-C40
			50.0 A	ST201M-C50
			60.0 A	ST201M-C60
			63.0 A	ST201M-C63

2 poles	Box Qty	Weight each (kg)	Rated Current	Part number
	5	0.230	0.5 A	ST202M-C0.5
			1.0 A	ST202M-C1
			1.6 A	ST202M-C1.6
			2.0 A	ST202M-C2
			3.0 A	ST202M-C3
			4.0 A	ST202M-C4
			5.0 A	ST202M-C5
			6.0 A	ST202M-C6
			7.0 A	ST202M-C7
			8.0 A	ST202M-C8
			10.0 A	ST202M-C10
			13.0 A	ST202M-C13
			15.0 A	ST202M-C15
			16.0 A	ST202M-C16
			20.0 A	ST202M-C20
			25.0 A	ST202M-C25
			30.0 A	ST202M-C30
			32.0 A	ST202M-C32
			35.0 A	ST202M-C35
			40.0 A	ST202M-C40
			50.0 A	ST202M-C50
			60.0 A	ST202M-C60
			63.0 A	ST202M-C63

1 pole + Neutral	Box Qty	Weight each (kg)	Rated Current	Part number
	5	0.230	0.5 A	ST201M-C0.5NA
			1.0 A	ST201M-C1NA
			1.6 A	ST201M-C1.6NA
			2.0 A	ST201M-C2NA
			3.0 A	ST201M-C3NA
			4.0 A	ST201M-C4NA
			5.0 A	ST201M-C5NA
			6.0 A	ST201M-C6NA
			7.0 A	ST201M-C7NA
			8.0 A	ST201M-C8NA
			10.0 A	ST201M-C10NA
			13.0 A	ST201M-C13NA
			15.0 A	ST201M-C15NA
			16.0 A	ST201M-C16NA
			20.0 A	ST201M-C20NA
			25.0 A	ST201M-C25NA
			30.0 A	ST201M-C30NA
			32.0 A	ST201M-C32NA
			35.0 A	ST201M-C35NA
			40.0 A	ST201M-C40NA
			50.0 A	ST201M-C50NA
			60.0 A	ST201M-C60NA
			63.0 A	ST201M-C63NA

3 poles	Box Qty	Weight each (kg)	Rated Current	Part number
	1	0.345	0.5 A	ST203M-C0.5
			1.0 A	ST203M-C1
			1.6 A	ST203M-C1.6
			2.0 A	ST203M-C2
			3.0 A	ST203M-C3
			4.0 A	ST203M-C4
			5.0 A	ST203M-C5
			6.0 A	ST203M-C6
			7.0 A	ST203M-C7
			8.0 A	ST203M-C8
			10.0 A	ST203M-C10
			13.0 A	ST203M-C13
			15.0 A	ST203M-C15
			16.0 A	ST203M-C16
			20.0 A	ST203M-C20
			25.0 A	ST203M-C25
			30.0 A	ST203M-C30
			32.0 A	ST203M-C32
			35.0 A	ST203M-C35
			40.0 A	ST203M-C40
			50.0 A	ST203M-C50
			60.0 A	ST203M-C60
			63.0 A	ST203M-C63

Section 2.3.2
Thermal-Magnetic Breaker

Technical catalog - Preliminary

SACE Tmax XT UL/CSA

New low voltage molded case circuit breakers up to 250A for UL 489 and CSA C22.2 Standards

Power and productivity
for a better world™

Ordering codes for XT3 UL/CSA
Circuit breakers

XT3 225A TMF - Fixed (F) - 3 poles - Front terminals (F) - UL/CSA

Thermal magnetic trip unit			Int Rtng (480 V)	N 25kA Part number	S 35kA Part number		
Type	In	I_3					
TMF	60	600		XT3NU3060AFF000XXX	XT3SU3060AFF000XXX		
	70	700		XT3NU3070AFF000XXX	XT3SU3070AFF000XXX		
	80	800		XT3NU3080AFF000XXX	XT3SU3080AFF000XXX		
	90	900		XT3NU3090AFF000XXX	XT3SU3090AFF000XXX		
	100	1000		XT3NU3100AFF000XXX	XT3SU3100AFF000XXX		
	110	1100		XT3NU3110AFF000XXX	XT3SU3110AFF000XXX		
	125	1250		XT3NU3125AFF000XXX	XT3SU3125AFF000XXX		
	150	1500		XT3NU3150AFF000XXX	XT3SU3150AFF000XXX		
	175	1750		XT3NU3175AFF000XXX	XT3SU3175AFF000XXX		
	200	2000		XT3NU3200AFF000XXX	XT3SU3200AFF000XXX		
	225	2250		XT3NU3225AFF000XXX	XT3SU3225AFF000XXX		

XT3 225A TMF - Fixed (F) - 4 poles - Front terminals (F) - UL/CSA

Thermal magnetic trip unit			Int Rtng (480 V)	N 25kA Part number	S 35kA Part number		
Type	In	I_3					
TMF	60	600		XT3NU4060AFF000XXX	XT3SU4060AFF000XXX		
	70	700		XT3NU4070AFF000XXX	XT3SU4070AFF000XXX		
	80	800		XT3NU4080AFF000XXX	XT3SU4080AFF000XXX		
	90	900		XT3NU4090AFF000XXX	XT3SU4090AFF000XXX		
	100	1000		XT3NU4100AFF000XXX	XT3SU4100AFF000XXX		
	110	1100		XT3NU4110AFF000XXX	XT3SU4110AFF000XXX		
	125	1250		XT3NU4125AFF000XXX	XT3SU4125AFF000XXX		
	150	1500		XT3NU4150AFF000XXX	XT3SU4150AFF000XXX		
	175	1750		XT3NU4175AFF000XXX	XT3SU4175AFF000XXX		
	200	2000		XT3NU4200AFF000XXX	XT3SU4200AFF000XXX		
	225	2250		XT3NU4225AFF000XXX	XT3SU4225AFF000XXX		

XT3 225A MCP (MA) - Fixed (F) - 3 poles - Front terminals (F) - UL/CSA

Magnetic trip unit			Int Rtng (480 V)	S 35 kA Part number			
Type	In	I_3					
MCP	100	600…1200		XT3SU3100MFF000XXX			
	110	660…1320		XT3SU3110MFF000XXX			
	125	750…1500		XT3SU3125MFF000XXX			
	150	900…1800		XT3SU3150MFF000XXX			
	200	1200…2400		XT3SU3200MFF000XXX			

XT3 225A switch - Fixed (F) - 3 poles - Front terminals (F) - UL/CSA

No trip unit			Int Rtng (480 V)	N 25kA Part number	S 35kA Part number		
Type	In	Mag. Override					
XT3 - D	225	2250		XT3NU3225DFF000XXX	XT3SU3225DFF000XXX		

XT3 225A switch - Fixed (F) - 4 poles - Front terminals (F) - UL/CSA

No trip unit			Int Rtng (480 V)	N 25kA Part number	S 35kA Part number		
Type	In	Mag. Override					
XT3 - D	225	2250		XT3NU4225DFF000XXX	XT3SU4225DFF000XXX		

2.4

Voltage Management

Product data sheet
Characteristics

Section 2.4.1
Transformer

1S1F
TRANSFORMER DRY 1KVA 240X480V-120/240V

Product availability : Stock - Normally stocked in distribution facility

Main

Product or component type	Dry Sealed Transformer
Primary voltage	240 x 480 V
Secondary voltage	120/240 V
Number of tap-offs	0

Complementary

Box number	7A
Phase	1 phase
Primary voltage	240 x 480 V : 120/240 V
Rated power in VA	1 kVA
Temperature rise	115 °C
Height	8.13 in
Width	6.94 in
Depth	5.31 in
Enclosure mounting	Wall mounted
Enclosure material	Painted sheet steel

Environment

NEMA degree of protection	NEMA 3R
Insulation temperature	356 °F (180 °C)
Product certifications	CSA cULus UL listed

Ordering and shipping details

Category	16277 - RESIN LVGP XFMR

Disclaimer: This documentation is not intended as a substitute for and is not to be used for determining suitability or reliability of these products for specific user applications

Discount Schedule	PE2
GTIN	00785901019862
Nbr. of units in pkg.	1
Package weight(Lbs)	24.77
Returnability	Y
Country of origin	MX

Offer Sustainability

Sustainable offer status	Green Premium product
RoHS (date code: YYWW)	Compliant - since 1430 - Schneider Electric declaration of conformity Schneider Electric declaration of conformity
REACh	Reference not containing SVHC above the threshold Reference not containing SVHC above the threshold
Product environmental profile	Available
Product end of life instructions	Need no specific recycling operations

Contractual warranty

Warranty period	18 months

PRODUCT DATASHEET

OVRHT3B

Sub Distribution and Panelboard – 400A and below

Product features

- UL Listed 1449 4th edition for Type 1 SPD applications.
- 50kA per phase protection.
- Individual thermally fused and protected MOVs.
- Includes pre-wired pigtail conductors.
- Multiple MOVs per phase eliminates single point failure.

Available configurations

Model number	kA per phase	Voltage	Configuration
OVRHT3B501201P	50kA	120V	1-phase, 2-wire + ground
OVRHT3B502201P	50kA	220V	1-phase, 2-wire + ground
OVRHT3B502301P	50kA	230V	1-phase, 2-wire + ground
OVRHT3B502401P	50kA	240V	1-phase, 2-wire + ground
OVRHT3B502771P	50kA	277V	1-phase, 2-wire + ground
OVRHT3B503471P	50kA	347V	1-phase, 2-wire + ground
OVRHT3B501202S	50kA	120/240V	2-phase, 3-wire + ground
OVRHT3B502402S	50kA	240/480V	2-phase, 3-wire + ground
OVRHT3B502403H	50kA	120/240V	3-phase High-Leg, 4-wire + ground
OVRHT3B501203Y	50kA	120/208V	3-phase Wye, 4-wire + ground
OVRHT3B502203Y	50kA	220/380V	3-phase Wye, 4-wire + ground
OVRHT3B502303Y	50kA	230/400V	3-phase Wye, 4-wire + ground
OVRHT3B502403Y	50kA	240/415V	3-phase Wye, 4-wire + ground
OVRHT3B502773Y	50kA	277/480V	3-phase Wye, 4-wire + ground
OVRHT3B503473Y	50kA	347/600V	3-phase Wye, 4-wire + ground
OVRHT3B502403D	50kA	240V	3-phase Delta, 3-wire + ground
OVRHT3B503803D	50kA	380V	3-phase Delta, 3-wire + ground
OVRHT3B504003D	50kA	400V	3-phase Delta, 3-wire + ground
OVRHT3B504803D	50kA	480V	3-phase Delta, 3-wire + ground
OVRHT3B506003D	50kA	600V	3-phase Delta, 3-wire + ground
Earthing Systems			
OVRHT3B502301PI	50kA	230V	1-phase, 2-wire + ground (for TNC earthing systems)
OVRHT3B502301PJ	50kA	230V	1-phase, 2-wire + ground (for TNS earthing systems)
OVRHT3B502301PK	50kA	230V	1-phase, 2-wire + ground (for IT earthing systems)
OVRHT3B502301PL	50kA	230V	1-phase, 2-wire + ground (for TT earthing systems)
Warranty			
3-years			

Product specifications

Electrical	
Nominal discharge current rating (I-n)	20kA (Earthing Systems 10kA)
Operating frequency	47–63Hz
Connection methods	Parallel to load 914.4mm (36") of 3.31mm² (#12 AWG) wires
Modes of protection	See performance data
Fault rating (SCCR)	100 kAIC
Response time	Less than 1 nanosecond (one per phase)
Standard monitoring	LED status indicator lights
Mechanical	
Weight	.23 kg (.5 lb.)
Enclosure type	NEMA 4X, non-metallic
Installation location	Indoor/Outdoor
Mounting method	12.7mm (1/2")–14 NPT thread
Operating environment	-35° to +80°C (-31° to +176°F)
Altitude	Up to 5000 m (16,400 ft.)
Product design	Individual thermally fused and protected MOVs
Regulatory	
UL 1449 4th edition	Type 1
UL 96A	Yes
IEEE C62.41.1, .2, C62.45	Yes
Listed by	UL

c UL US LISTED

RoHS Compliant

Dimensional specifications

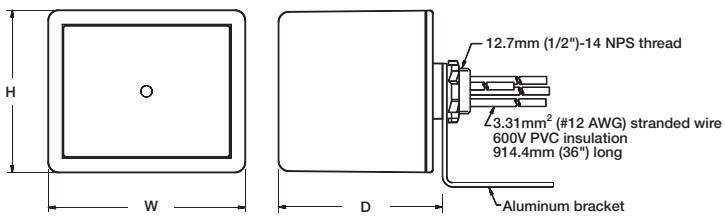

Dim	Millimeters (Inches)
H	75.0 (2.95)
W	90.0 (3.54)
D	75.0 (2.95)

OVRHT3B series Earthing Systems

There is a OVRHT3B model for each power system configuration (neutral grounding practice) as defined in EN60950:

For TNC grounded systems use "I" suffix – Neutral and PE (protected earth conductor) are combined throughout the system while TNCS splits the combined PEN into a separate neutral and PE at the service entry; the U.S. practice is a variation of this. The neutral is earthed at the transformer for both types. The OVRHT3B50230I model is suited for both TNC and TNCS systems.

For TNS grounded systems use "J" suffix – Neutral is earthed at the transformer; however, is not bonded to earth or the PE elsewhere. The PE is carried to the site from the transformer and bonded to site earth. The OVRHT3B50230J model is intended for use on this system; it can also be used on TNCS as well as on U.S. 120/240V services without the neutral.

For IT and IT-L grounded systems use "K" suffix – The transformer is unearthed or earthed through high impedance. The PE originates at site; however, is not bonded to a service conductor. No conductor in this system is designated as neutral. The OVRHT3B50230K model is suited for this application; it can also be used on TT, TNS, TNCS and U.S. services without neutral power systems.

For TT grounded systems use "L" suffix – Neutral is earthed at the transformer. The PE originates at site; however, is not bonded to the neutral. There is no interconnection between the PE and transformer earth. The OVRHT3B50230L model is for use on this system; it can also be employed upon TNS, TNCS and U.S. services without neutral.

Section 2.4.3
Mouser Transformer

Click here for Alphanumeric Index

	PRODUCTS UNLIMITED	PRODUCTS UNLIMITED	PRODUCTS UNLIMITED	PRODUCTS UNLIMITED	PRODUCTS UNLIMITED
Series	**4000**	**4000**	**4000**	**4000**	**4000**
Type	Class II UL1585 Transformer Inherently Energy Limited	Class II UL1585 Transformer Inherently Energy Limited	Class II UL1585 Transformer Inherently Energy Limited	Class II UL1585 Transformer Inherently Energy Limited	Class II UL1585 Transformer Inherently Energy Limited
VA Rating	5, 10, 20 & 30VA	10, 20 & 30VA	20 & 40VA	40 & 50VA	40 & 50VA
Terminal Options	Wire Leads	Quick Connect	Wire Leads & Screws	WIre Leads	Quick Connect
Mounting Options	Foot or Panel	Foot or Panel	Plate	Foot or Panel	Foot or Panel
Agency Approval	c UL us	c UL us	c UL us	c UL us	c UL us
Page Number	204	205	206	207	208

Transformers

	PRODUCTS UNLIMITED	PRODUCTS UNLIMITED	PRODUCTS UNLIMITED	PRODUCTS UNLIMITED	PRODUCTS UNLIMITED
Series	**4000**	**4000**	**4700**	**4700**	**57**
Type	Class II UL1585 Transformer Non-Inherently Energy Limited Secondary Fusing Required (Opt. integral fuse or breaker)	Class II UL1585 Transformer Non-Inherently Energy Limited Secondary Fusing Required (Opt. integral fuse or breaker)	UL506 Transformer Non-Fused	UL506 Transformer Non-Fused	Transformer Relay Inherently Energy Limited 9100 or 9400 Series Relay
VA Rating	60 & 75VA	60 & 75VA	60, 100 & 150VA	60, 100 & 150VA	40VA
Terminal Options	Wire Leads	Quick Connect	Wire Leads	Quick Connect	Wire Leads and Screws (optional Quick Connects)
Mounting Options	Foot or Panel	Foot or Panel	Foot	Foot	Plate
Agency Approval	c UL us	c UL us	c UL us	c UL us	c UL us
Page Number	209	210	211	211	212

Specifications and/or agency recognitions do not necessarily apply to all models within a particular series. When multiple ratings are listed, no individual rating may be exceeded by the combination of others.

Alphanumeric Index

Series	Type	Page
4000	5-30VA, Wire Leads, Class II	204
4000	10-30VA, QC Terminals, Class II	205
4000	20-40VA, Plate Mount, Class II	206
4000	40-50VA, Wire Leads, Class II	207
4000	40-50VA, QC Terminals, Class II	208
4000	60-75VA, Wire Leads, Class II	209
4000	60-75VA, QC Terminals, Class II	210
4700	60-150VA, Wire Leads or QC, UL 508	211
57	Transformer Relay for HVAC	212

Transformers..... Custom Capabilities.....203

Transformers..... Questions and Answers.....202

Transformers 201-212 **2**

Transformers...Questions and Answers

What is a Transformer?
A transformer is a passive electrical device which is designed to change one AC voltage to another by magnetic induction. It "steps-up" or "steps-down" voltage in order to match incoming supply voltage from the utility to the voltage required by the user's end product. Typical USA supply voltages are 120, 208, 240, 277, 480 (and 575 in Canada). Common International voltages include 110, 220, 380, and 415.

What is an Isolation Transformer?
An isolation transformer is a transformer whose primary and secondary windings are separate for the purpose of isolating the circuit from the supply source.

What is an Autotransformer?
An autotransformer has only one winding, which is shared by the primary and secondary circuits. Autotransformers do not provide isolation but offer a substantial savings when used to obtain small increments of voltage above or below the input voltage.

What is a Class II Transformer?
A Class II transformer is used to supply Class II circuits. Class II transformers have a maximum VA (Volt-Ampere) rating of less than 100 and a maximum secondary output of 30 VAC. The maximum VA generally offered is 75 and the most common secondary voltage is 24 VAC. No load secondary voltage may be as high as 29 VAC. All Class II transformers are either inherently or non-inherently limited. This means that the maximum output current of the transformer is limited, either by the intrinsic coil impedance or by a fuse or circuit breaker. These transformers are designed to meet the requirements of U.L. 1585.

Inherently Energy Limited Transformers - Class II transformers up to 50 VA are "Inherently Limited" which means that the transformer, if overloaded, will short itself out and fail safely, *not requiring a fuse*.

Non-Inherently Energy Limited Transformers - 60 thru 75 VA Class II transformers are generally *protected by a resettable circuit breaker or a fuse* within the transformer secondary. Without this overload protection, the transformer would not satisfy the safety requirements for a Class II circuit.

What is a General Purpose Transformer?
General purpose transformers include any VA rating along with primary and secondary voltage ratings up to 600 VAC. *Although internal fusing is an option, no fusing is required.* However, applicable U.L. specifications may require fusing in the end product. These transformers are designed to meet the requirements of U.L. 506.

What is Voltage Regulation?
Voltage regulation is the percent of change in the output voltage when the load is reduced from full load to no load while the input voltage remains constant.

What is the effect of a load on a control transformer?
A control transformer is designed to provide rated output voltage at full VA. As the load decreases, the output voltage will go up. Conversely, increases in load will result in lower output voltages. Typically, the smaller the VA size of the unit, the greater difference there is between no-load and full-load voltage.

Part Numbering System

This chart illustrates a breakdown of our part numbering system on a few of our most popular models. Consult factory for your specific requirements.

Typical Part No. ▶ 4000 – 01 E 07 BB 999

1. Series:
4000 = Class II (UL 1585) inherently protected or internally fused.
4001 = Class II (UL 1585) externally fused.
4100 = No UL or CSA approval.
4500 = Autotransformer.
4600 = 60 Hz. only
4700 = General Purpose (UL 506).

2. Packaging:
– = Bulk Pack Y = Individual Box

3. Primary and Secondary Voltages:

	Primary V	Secondary V		Primary V	Secondary V
01 =	120	24	09 =	208/240	24
02 =	240	24	13 =	208/240/480	24
03 =	277	24	20 =	120	12
04 =	480	24	51 =	380/415	24
05 =	120/208/240	24	78 =	575	24

4. VA and Series Dimension:

	VA Rating	Series Size		VA Rating	Series Size
A =	10	3/4" (19.05mm)	AW =	50	7/8" (22.22 mm)
C =	20	3/4" (19.05mm)	L =	60	15/16" (23.81mm)
M =	30	3/4" (19.05mm)	J =	75	15/16" (23.81mm)
E =	40	7/8" (22.22 mm)	K =	100	1 1/4" (31.75mm)
V =	40	3/4" (19.05mm)	Z =	150	1 1/4" (31.75mm)

5. Stack Thickness and Fusing (Generally determined at factory):
19 = 0.5" (12.7mm) thick. 07 = 0.875" (22.225mm) thick. 15 = 1.00" (25.4mm) thick.
02 = 0.625" (15.875mm) thick. 04 = 1.00" (25.4mm) thick. 18 = 1.25" (31.75mm) thick.

6. Mounting and Termination:

	Mounting	Termination		Mounting	Termination
K =	Foot Mount	Leads	AE =	Foot Mount	QCs on Top
BC =	4" (101.6mm)foot	Screw / Leads	BB =	Foot Mount	QCs on One Side
G =	Panel Mount	Leads	AB =	Foot Mount	QCs on Other Side

7. Customer ID Suffix:
000-999 = Factory assigned customer ID

Example: 4000-01E07BB999 This part number is a Class II transformer with a 120V primary and 24V secondary. It is 40VA and inherently energy limited. This is a foot mount transformer with quick connect terminals (line & load) exiting out of the same side of the transformer cover.

Note: This is a partial listing only. Consult factory for your specific requirements. All combinations of voltage and VA may not be available.

Custom Transformer Capabilities

In addition to our industry leading standard transformer series (see the following pages), We have a proven track record of being an innovative leader in custom transformer designs. We specialize in working with our customers in the initial stages of their design process, offering ideas and suggestions which lead to a transformer product that can be manufactured with the lowest *Defective Parts Per Million (DPPM)* levels and at the highest value to the customer. The following is a list of guidelines for transformer products which compliment our Demand Flow Manufacturing system.

Leaded Transformers - Quick Connect Transformers - PC Mount Transformers - Inductors

- 5 VA through 400 VA
- Spray on rust preventative
- Butt stack and weld lamination construction
- Molded bobbin construction
- Numerous welded bracket options
- Molded cover with integral strain relief for lead or quick connect terminal

When a transformer fits the above criteria and the customer is willing to share in the design process with us, we can both benefit from *Design For Manufacturing (DFM)*, as demonstrated in the following example:

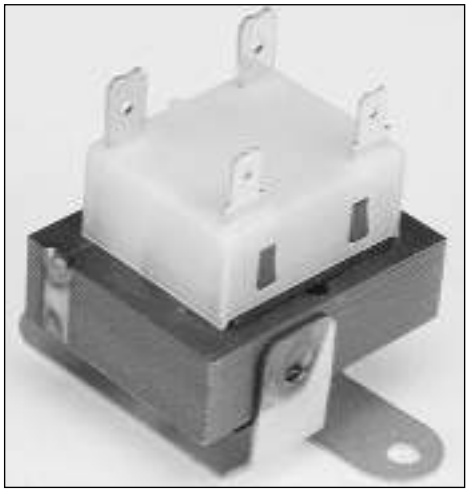

Traditional Method

- DPPM level >2000
- 10 Week lead time
- 3 Part numbers
- 12 Inventory turns
- Costly
- Fragile design

DFM Method

- DPPM level <100
- 1 Week lead time
- 1 Universal part number
- 50 Inventory turns
- 20% Cost improvement
- Robust design

Our electrical and mechanical design groups are ready to work with you on your specific product needs.

4000 series

Class II UL 1585 Transformer
5 VA - 30VA Inherently Energy Limited
No Secondary Fusing Required
Wire Leads

File E87824

Users should thoroughly review the technical data before selecting a product part number. It is recommended that users also seek out the pertinent approvals files of the agencies/laboratories and review them to ensure the product meets the requirements for a given application.

Features

- Type K Foot Mount - features a steel bracket welded to the bottom of the laminations for easy mounting.
- Type G Panel Mount - features .179" (4.55 mm) diameter holes in each corner to allow direct mounting to a panel.
- Multiple voltage combinations are available. Consult factory for availability.

Specifications

Wire Size: All leads are 18 AWG stranded 2/64" (.794 mm) insulation thickness. Standard parts have 12" (305 mm) total length with 1/2" (12.7 mm) strip.
Frequency: 50/60 Hz.
Insulation Class: UL Class B (130°C).
Weight: 5VA – 10.56 oz. (300 g); 10VA – 10.88 oz. (308 g); 20VA – 14.24 oz. (404 g); 30VA – 19.2 oz. (544 g).

Standard "999" Models Available

Primary V	Secondary V	20VA
120	24	4000-01C02K999
120	24	4000-01C02K999

For more details about standard models see Part Numbering System table at beginning of transformer section in this catalog .

Partial Listing of Custom Models

Primary V	Secondary V	5VA	10VA	20VA	30VA
120	24	4000-01X19K*	4000-01A19K*	4000-01C02K*	4000-01M04K*
240	24	4000-02X19K*	4000-02A19K*	4000-02C02K*	4000-02M04K*
277	24	4000-03X19K*	4000-03A19K*	4000-03C02K*	4000-03M04K*
480	24	4000-04X19K*	4000-04A19K*	4000-04C02K*	4000-04M04K*
208/240	24	–	–	4000-09C02K*	4000-09M04K*
120	12	–	–	4000-20C02K*	–

* A three digit customer ID suffix will be assigned by the factory.
All custom model part numbers are listed as Type K Foot Mount. To specify Type G Panel Mount, replace K in above part numbers with G.

Outline Dimensions

Type K Foot Mount

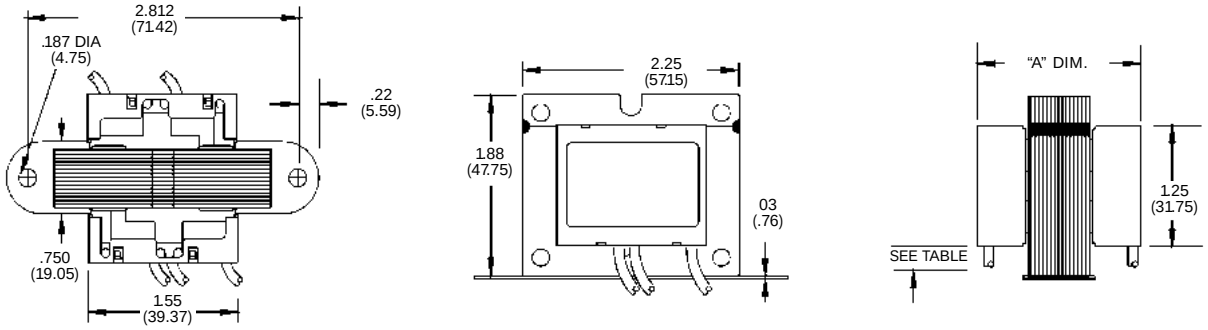

Type G Panel Mount

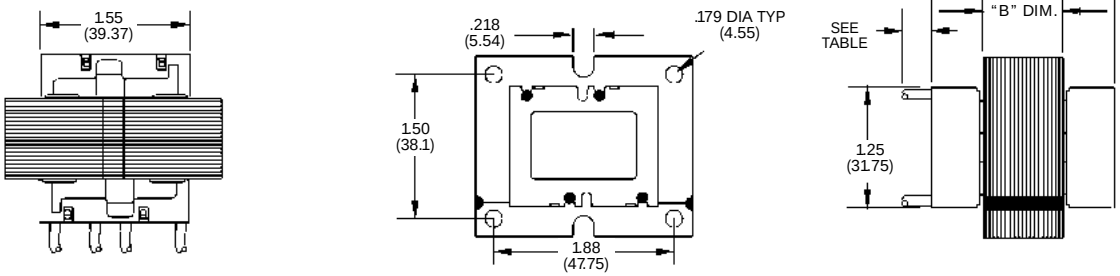

"A" and "B" Dimensions

	5 VA	10 VA	20 VA	30 VA
"A" Dimension [inches (mm)]	1.5 (38.1)	1.5 (38.1)	1.625 (41.28)	2.00 (50.8)
"B" Dimension [inches (mm)]	0.5 (12.7)	0.5 (12.7)	0.625 (15.9)	1.00 (25.4)

Details regarding leads on standard models

	Primary Leads							Secondary Leads	
Voltage	COM	120	208	240	277	480	575	24	VAC
Color	Black	White	Red	Orange	Brown	Black/Red	Gray	Blue	Yellow
Length [inches (mm)]	12 (305)	12 (305)	12 (305)	12 (305)	12 (305)	12 (305)	12 (305)	12 (305)	12 (305)
Strip Length [inches (mm)]	0.5 (12.7)	0.5 (12.7)	0.5 (12.7)	0.5 (12.7)	0.5 (12.7)	0.5 (12.7)	0.5 (12.7)	0.5 (12.7)	0.5 (12.7)

Dimensions are shown for reference purposes only.

Dimensions are in inches over (millimeters) unless otherwise specified.

Specifications and availability subject to change.

4000 series

Class II UL 1585 Transformer
10VA - 30VA Inherently Energy Limited
No Secondary Fusing Required
Quick Connect Terminals

File E87824

Users should thoroughly review the technical data before selecting a product part number. It is recommended that users also seek out the pertinent approvals files of the agencies/laboratories and review them to ensure the product meets the requirements for a given application.

Features

- Type BB Same Side Termination - features quick connect terminals with line and load terminations on the same side of transformer.
- Type AE Laydown Termination - features quick connect terminals with line and load terminations on the top of transformer.
- Type AB Opposite Side Termination - features quick connect terminals with line and load terminations on opposite sides of transformer.
- Multiple voltage combinations are available. Consult factory for availability.

Specifications

Terminals: Standard male quick connects are .250" x .032" (6.35 x .81 mm). Other available quick connects include .187" x .032" (4.75 x .81 mm) and .187" x .020" (4.75 x .51 mm).
Frequency: 50/60 Hz.
Insulation Class: UL Class B (130°C).
Weight: 10VA – 10.9 oz. (308 g); 20VA – 14.1 oz. (399 g); 30VA – 18.6 oz. (525 g).

Standard "999" Models Available

No standard models are offered.

For more details about standard models see Part Numbering System table at beginning of transformer section in this catalog .

Partial Listing of Custom Models

Primary V	Secondary V	10VA	20VA	30VA	30VA
120	24	4000-01A19BB*	4000-01C02BB*	4000-01M04BB*	4000-01M04BB*
240	24	4000-02A19BB*	4000-02C02BB*	4000-02M04BB*	4000-02M04BB*
277	24	–	–	4000-03M04BB*	4000-03M04BB*
480	24	–	–	4000-04M04BB*	4000-04M04BB*
208/240	24	–	–	4000-09M04BB*	4000-09M04BB*
120	12	–	4000-20C02BB*	–	–

* A three digit customer ID suffix will be assigned by the factory.
To specify Type AE Laydown Termination, replace BB in above part numbers with AE.

Outline Dimensions

Type BB Same Side Termination

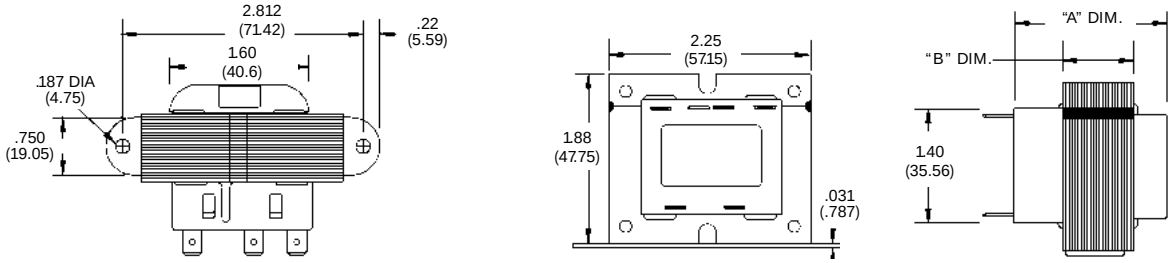

Type AE Laydown Termination

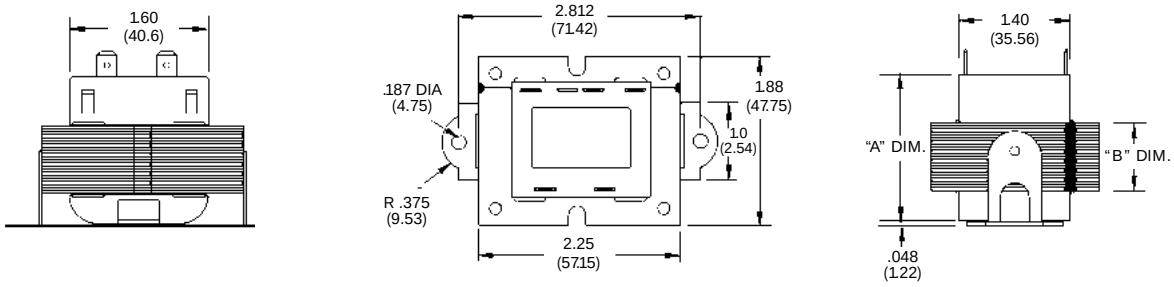

Type AB Opposite Side Termination

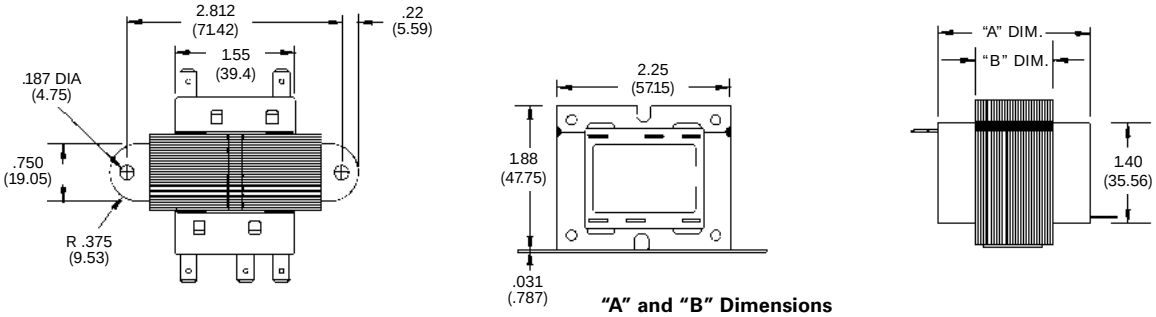

"A" and "B" Dimensions

	10VA	20VA	30VA
"A" Dimension [inches (mm)]	1.50 (38.1)	1.625 (41.28)	2.00 (50.8)
"B" Dimension [inches (mm)]	.50 (12.7)	0.625 (15.88)	1.00 (25.4)

Dimensions are shown for reference purposes only.

Dimensions are in inches over (millimeters) unless otherwise specified.

Specifications and availability subject to change.

4000 series

Class II UL 1585 Transformer
20VA - 40VA Inherently Energy Limited
No Secondary Fusing Required
Plate for Electrical Box Mounting

File E87824

Users should thoroughly review the technical data before selecting a product part number. It is recommended that users also seek out the pertinent approvals files of the agencies/laboratories and review them to ensure the product meets the requirements for a given application.

Features

- Type BC Plate Mount - mounted on a 4” (101.6mm) square plate designed to fit a standard 4” (101.6mm) square electrical box.
- The line voltage is connected inside the electrical boxto the color-coded leads on the transformer. The low voltage is terminated to either 1/4” (4.75 mm) quick connects and/or #6-32 screw furnished on the secondary side.
- Multiple voltage combinations are available. Consult factory for availability.

Specifications

Wire Size: All leads are 18 AWG stranded 2/64” (.794 mm) insulation thickness. Standard parts have 12” (305 mm) total length with 1/2” (12.7 mm) strip.
Frequency: 50/60 Hz.
Insulation Class: UL Class B (130°C).
Weight: 20VA – 19.2 oz. (544 g); 40VA – 32 oz. (906 g).

Standard “999” Models Available

Primary V	Secondary V	20VA	40VA
120	24	4000-01C02BC999	4000-01V18BC999

For more details about standard models see Part Numbering System table at beginning of transformer section in this catalog .

Partial Listing of Custom Models

Primary V	Secondary V	20VA	40VA
120	24	4000-01C02BC*	4000-01V18BC*
208/240	24	4000-09C02BC*	4000-09V18BC*

* A three digit customer ID suffix will be assigned by the factory.
All custom model part numbers are listed as Type K Foot Mount. To specify Type G Panel Mount, replace K in above part numbers with G.

Outline Dimensions

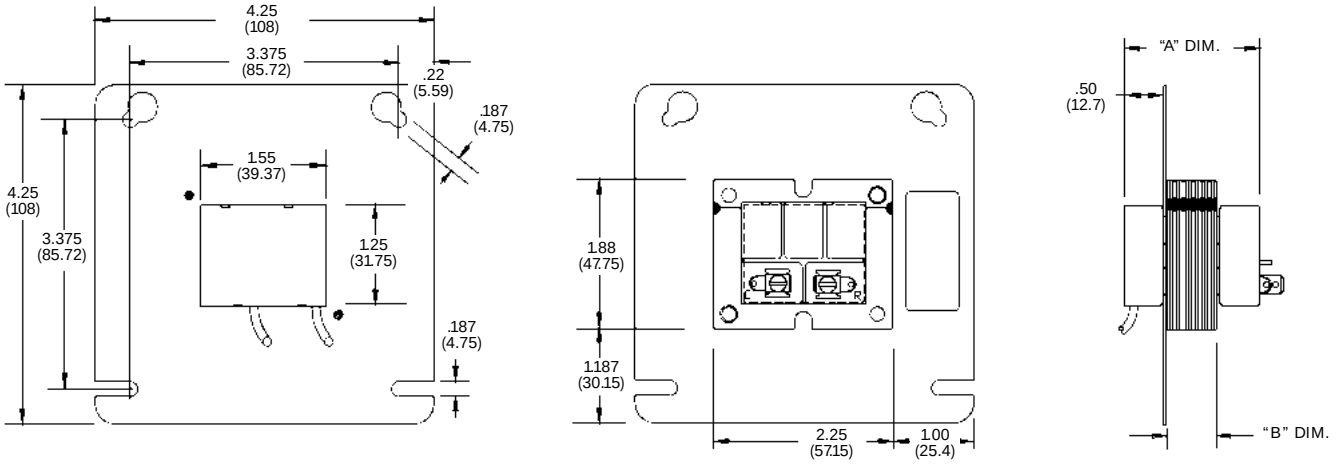

“A” and “B” Dimensions

	20 VA	40 VA
“A” Dimension [inches (mm)]	1.625 (41.28)	2.56 (65.02)
“B” Dimension [inches (mm)]	.625 (15.88)	1.25 (31.75)

Details regarding leads on standard models

	Primary Leads							Secondary Leads	
Voltage	COM	120	208	240	277	480	575	24	VAC
Color	Black	White	Red	Orange	Brown	Black/Red	Gray	Blue	Yellow
Length [inches (mm)]	12 (305)	12 (305)	12 (305)	12 (305)	12 (305)	12 (305)	12 (305)	12 (305)	12 (305)
Strip Length [inches (mm)]	0.5 (12.7)	0.5 (12.7)	0.5 (12.7)	0.5 (12.7)	0.5 (12.7)	0.5 (12.7)	0.5 (12.7)	0.5 (12.7)	0.5 (12.7)

Dimensions are shown for reference purposes only.
Dimensions are in inches over (millimeters) unless otherwise specified.
Specifications and availability subject to change.

4000 series

Class II UL 1585 Transformer
40 VA - 50VA Inherently Energy Limited
No Secondary Fusing Required
Wire Leads

File E87824

Users should thoroughly review the technical data before selecting a product part number. It is recommended that users also seek out the pertinent approvals files of the agencies/laboratories and review them to ensure the product meets the requirements for a given application.

Features

- Type K Foot Mount - features a steel bracket welded to the bottom of the laminations for easy mounting.
- Type G Panel Mount - features .156" (3.96 mm) diameter holes in each corner to allow direct mounting to a panel.
- Multiple voltage combinations are available. Consult factory for availability.

Specifications

Wire Size: All leads are 18 AWG stranded 2/64" (.794 mm) insulation thickness. Standard parts have 12" (305 mm) total length with 1/2" (12.7 mm) strip.
Frequency: 50/60 Hz.
Insulation Class: UL Class B (130°C).
Weight: 40VA – 24.3 oz. (600 g); 50VA – 33.6 oz. (953 g).

Standard "999" Models Available

Primary V	Secondary V	40VA	50VA
120	24	4000-01E07K999	4000-01AW18K999
277	24	4000-03E07K999	4000-03AW18K999
480	24	4000-04E07K999	4000-04AW18K999
120/208/240	24	4000-05E07K999	–
208/240	24	4000-09E07K999	4000-09AW18K999

For more details about standard models see Part Numbering System table at beginning of transformer section in this catalog .

Partial Listing of Custom Models

Primary V	Secondary V	40VA	40VA	50VA
120	24	4000-01V18K*	4000-01E07K*	4000-01AW18K*
240	24	4000-02V18K*	4000-02E07K*	4000-02AW18K*
277	24	4000-03V18K*	4000-03E07K*	4000-03AW18K*
480	24	4000-04V18K*	4000-04E07K*	4000-04AW18K*
120/208/240	24	–	4000-05E07K*	–
208/240	24	4000-09V18K*	4000-09E07K*	4000-09AW18K*
208/240/480	24	–	4000-13E07K*	–
380/415	24	4000-51V18K*	4000-51E07K*	4000-51AW18K*
575	24	4000-78V18K*	4000-78E07K*	4000-78AW18K*

* A three digit customer ID suffix will be assigned by the factory.
All custom model part numbers are listed as Type K Foot Mount. To specify Type G Panel Mount, replace K in above part numbers with G.

Outline Dimensions

Type K Foot Mount

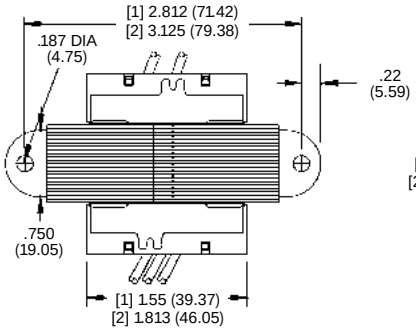

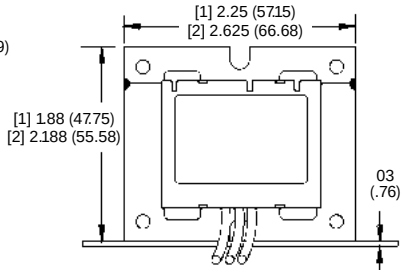

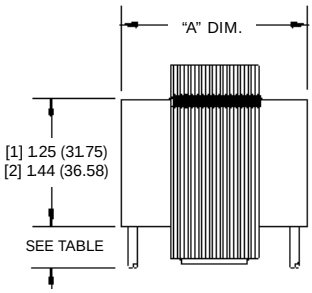

Type G Panel Mount

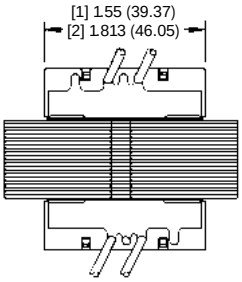

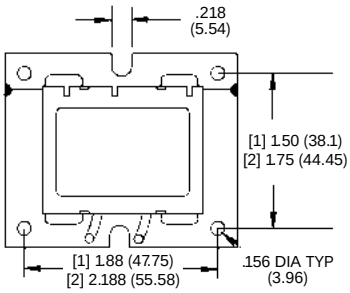

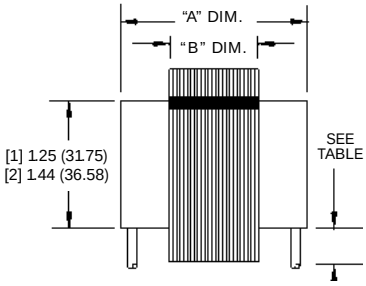

[1] Applies to V18 models.
[2] Applies to E07 & AW18 models.

"A" and "B" Dimensions

	40 VA / V18	40 VA / E07	50 VA / AW18
"A" Dimension [inches (mm)]	2.25 (57.15)	2.125 (53.98)	2.56 (65.02)
"B" Dimension [inches (mm)]	1.25 (31.75)	0.875 (22.22)	1.25 (31.75)

Details regarding leads on standard models

	Primary Leads							Secondary Leads	
Voltage	COM	120	208	240	277	480	575	24	VAC
Color	Black	White	Red	Orange	Brown	Black/Red	Gray	Blue	Yellow
Length [inches (mm)]	12 (305)	12 (305)	12 (305)	12 (305)	12 (305)	12 (305)	12 (305)	12 (305)	12 (305)
Strip Length [inches (mm)]	0.5 (12.7)	0.5 (12.7)	0.5 (12.7)	0.5 (12.7)	0.5 (12.7)	0.5 (12.7)	0.5 (12.7)	0.5 (12.7)	0.5 (12.7)

4000 series

Class II UL 1585 Transformer
40VA - 50VA Inherently Energy Limited
No Secondary Fusing Required
Quick Connect Terminals

File E87824

Users should thoroughly review the technical data before selecting a product part number. It is recommended that users also seek out the pertinent approvals files of the agencies/laboratories and review them to ensure the product meets the requirements for a given application.

Features

- Type BB Same Side Termination - features quick connect terminals with line and load terminations on the same side of transformer.
- Type AE Laydown Termination - features quick connect terminals with line and load terminations on the top of transformer.
- Type AB Opposite Side Termination - features quick connect terminals with line and load terminations on opposite sides of transformer.
- Multiple voltage combinations are available. Consult factory for availability.

Specifications

Terminals: Standard male quick connects are .250" x .032" (6.35 x .81 mm). Other available quick connects include .187" x .032" (4.75 x .81 mm) and .187" x .020" (4.75 x .51 mm).
Frequency: 50/60 Hz.
Insulation Class: UL Class B (130°C).
Weight: 40VA – 22.4 oz. (636 g); 50VA – 35.2 oz. (999 g).

Standard "999" Models Available

Primary V	Secondary V	40VA
120	24	4000-01E07AE999
120	24	4000-01E07BB999
208/240	24	4000-09E07AE999

For more details about standard models see Part Numbering System table at beginning of transformer section in this catalog .

Partial Listing of Custom Models

Primary V	Secondary V	40VA	40VA	40VA	50VA
120	24	4000-01E07BB*	4000-01V18BB*	4000-01V18AB*	4000-01AW18BB*
240	24	4000-02E07BB*	4000-02V18BB*	4000-02V18AB*	4000-02AW18BB*
277	24	4000-03E07BB*	4000-03V18BB*	4000-03V18AB*	4000-03AW18BB*
480	24	4000-04E07BB*	4000-04V18BB*	4000-04V18AB*	4000-04AW18BB*
208/240	24	4000-09E07BB*	4000-09V18BB*	4000-09V18AB*	4000-09AW18BB*
380/415	24	4000-51E07BB*	4000-51V18BB*	4000-51V18AB*	4000-51AW18BB*
575	24	4000-78E07BB*	4000-78V18BB*	–	4000-78AW18BB*

* A three digit customer ID suffix will be assigned by the factory.
To specify Type AE Laydown Termination, replace BB in above part numbers with AE.

Outline Dimensions

Type BB Same Side Termination

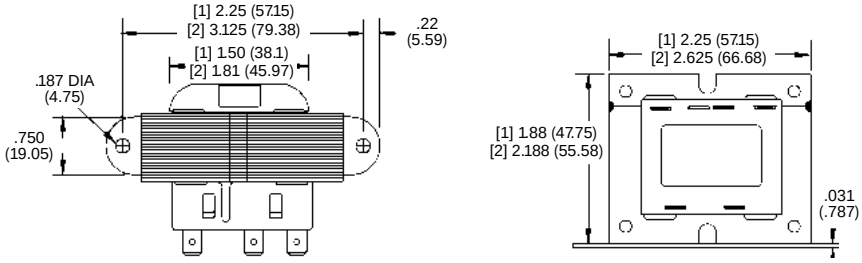

Type AE Laydown Termination

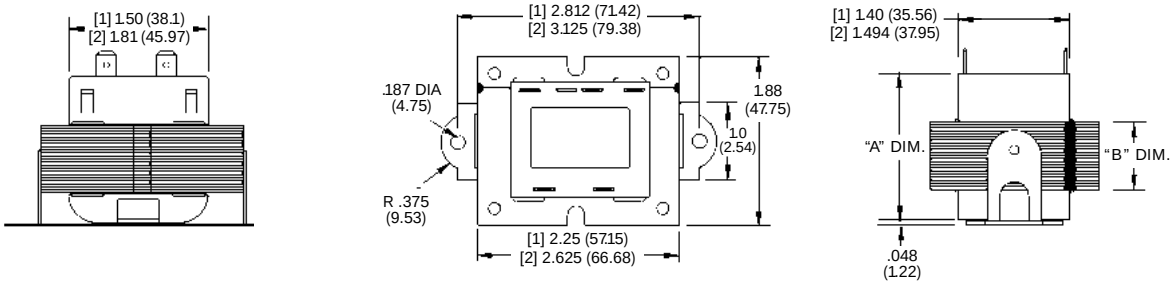

Type AB Opposite Side Termination

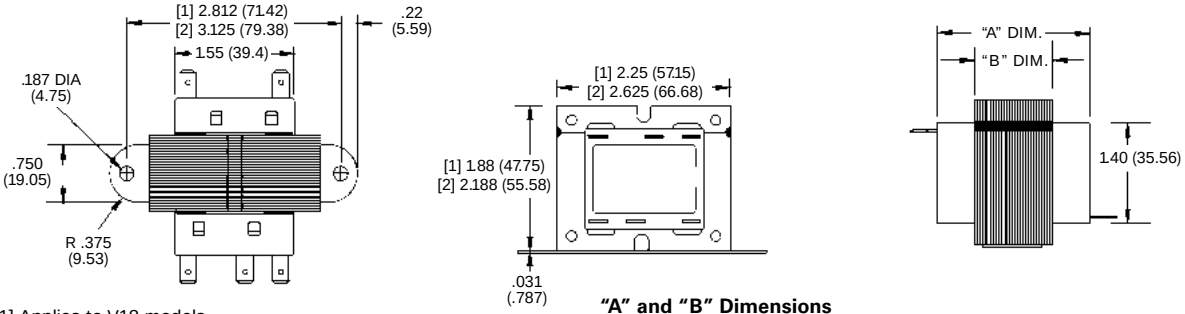

[1] Applies to V18 models.
[2] Applies to E07 & AW18 models.

"A" and "B" Dimensions

	40 VA / V18	40 VA / E07	50 VA / AW18
"A" Dimension [inches (mm)]	2.25 (57.15)	2.125 (53.98)	2.56 (65.02)
"B" Dimension [inches (mm)]	1.25 (31.75)	0.875 (22.22)	1.25 (31.75)

Dimensions are shown for reference purposes only.
Dimensions are in inches over (millimeters) unless otherwise specified.
Specifications and availability subject to change.
www.tycoelectronics.com
Technical support:
Refer to inside back cover.

4000 series

Class II UL 1585 Transformer
60VA -75VA Non-Inherently Energy Limited
Secondary Fusing Required
Wire Leads

File E87824

Users should thoroughly review the technical data before selecting a product part number. It is recommended that users also seek out the pertinent approvals files of the agencies/laboratories and review them to ensure the product meets the requirements for a given application.

Features

- Type K Foot Mount - features a steel bracket welded to the bottom of the laminations for easy mounting.
- Type G Panel Mount - features .218" (5.54 mm) diameter holes in each corner to allow direct mounting to a panel.
- For agency approval, 60 & 75VA transformers must have one of the following overcurrent protectors in series with the secondary winding: Internal fuse, integral circuit breaker. Any customer-supplied fusing or protection must be approved by the factory.
- Multiple voltage combinations are available. Consult factory for availability.

Standard "999" Models Available

Primary V	Secondary V	75VA
120	24	4000-01J15K999
277	24	4000-03J15K999
208/240	24	4000-09J15K999
575	24	4000-78J15K999
120/208/240/480	24	4000-08J15K999

For more details about standard models see Part Numbering System table at beginning of transformer section in this catalog . All 75VA standard models come with an integral circuit breaker.

Specifications

Wire Size: All leads are 18 AWG stranded 2/64" (.794 mm) insulation thickness. Standard parts have 12" (305 mm) total length with 1/2" (12.7 mm) strip.
Frequency: 50/60 Hz.
Insulation Class: UL Class B (130°C).
Weight: 60VA – 35.2 oz. (997 g); 75VA – 38.4 oz. (1087 g).

Partial Listing of Custom Models

Primary V	Secondary V	60VA	75VA
120	24	4000-01L15K*	4000-01J15K*
240	24	4000-02L15K*	4000-02J15K*
277	24	4000-03L15K*	4000-03J15K*
480	24	4000-04L15K*	4000-04J15K*
120/208/240	24	4000-05L15K*	4000-05J15K*
208/240	24	4000-09L15K*	4000-09J15K*
208/240/480	24	–	4000-13J15K*
380/415	24	–	4000-51J15K*
575	24	–	4000-78J15K*

* A three digit customer ID suffix will be assigned by the factory.
For Type G Panel Mount, replace K in above part numbers with G.

Outline Dimensions

Type K Foot Mount - Internally Fused

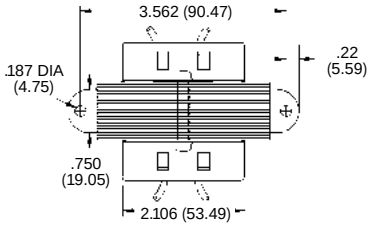

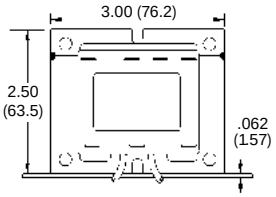

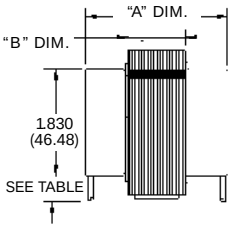

Type K Foot Mount - Integral Circuit Breaker

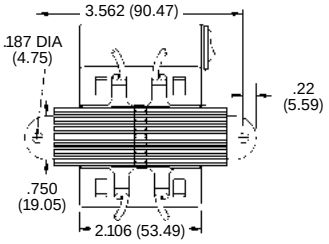

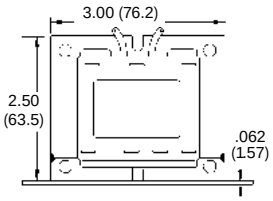

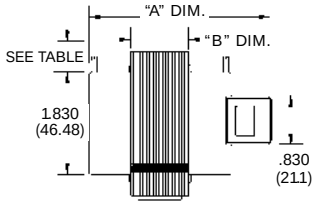

Type G Panel Mount

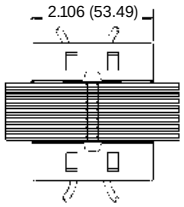

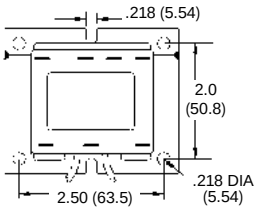

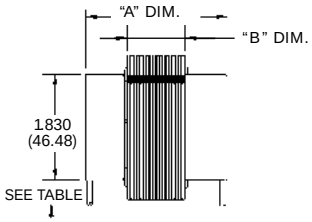

"A" and "B" Dimensions for 60VA & 75VA Models

	L15K & J15K Internally Fused	L15K & J15K w/ Integral Circuit Breaker	J41K Standard Part
"A" Dimension [inches (mm)]	2.475 (62.86)	3.25 (82.55)	3.45 (87.63)
"B" Dimension [inches (mm)]	1.00 (25.4)	1.00 (25.4)	1.125 (28.58)

Details regarding leads on standard models

	Primary Leads							Secondary Leads	
Voltage	COM	120	208	240	277	480	575	24	VAC
Color	Black	White	Red	Orange	Brown	Black/Red	Gray	Blue	Yellow
Length [inches (mm)]	12 (305)	12 (305)	12 (305)	12 (305)	12 (305)	12 (305)	12 (305)	12 (305)	12 (305)
Strip Length [inches (mm)]	0.5 (12.7)	0.5 (12.7)	0.5 (12.7)	0.5 (12.7)	0.5 (12.7)	0.5 (12.7)	0.5 (12.7)	0.5 (12.7)	0.5 (12.7)

Dimensions are shown for reference purposes only.

Dimensions are in inches over (millimeters) unless otherwise specified.

Specifications and availability subject to change.

4000 series

Class II UL 1585 Transformer
60VA -75VA Non-Inherently Energy Limited
Secondary Fusing Required
Quick Connect Terminals

File E87824

Users should thoroughly review the technical data before selecting a product part number. It is recommended that users also seek out the pertinent approvals files of the agencies/laboratories and review them to ensure the product meets the requirements for a given application.

Features

- Type BB Same Side Termination - features quick connect terminals with line and load terminations on the same side of transformer.
- Type AE Laydown Termination - features quick connect terminals with line and load terminations on the top of transformer.
- For agency approval, 60 & 75VA transformers must have one of the following overcurrent protectors in series with the secondary winding: Internal fuse, integral circuit breaker. Any customer-supplied fusing or protection must be approved by the factory.
- Multiple voltage combinations are available. Consult factory for availability.

Standard "999" Models Available

Primary V	Secondary V	75VA
120	24	4000-01J15AE999
208/240	24	4000-09J15AE999

For more details about standard models see Part Numbering System table at beginning of transformer section in this catalog. All 75VA standard models come with an integral circuit breaker.

Specifications

Terminals: Standard male quick connects are .250" x .032" (6.35 x .81 mm). Other available quick connects include .187" x .032" (4.75 x .81 mm) and .187" x .020" (4.75 x .51 mm).
Frequency: 50/60 Hz.
Insulation Class: UL Class B (130°C).
Weight: 60VA – 35.2 oz. (997 g); 75VA – 38.4 oz. (1087 g).

Partial Listing of Custom Models

Primary V	Secondary V	60VA	75VA
120	24	4000-01L15BB*	4000-01J15BB*
240	24	4000-02L15BB*	4000-02J15BB*
277	24	4000-03L15BB*	4000-03J15BB*
480	24	4000-04L15BB*	4000-04J15BB*
120/208/240	24	4000-05L15BB*	4000-05J15BB*
208/240	24	4000-09L15BB*	4000-09J15BB*
208/240/480	24	–	4000-13J15BB*
380/415	24	–	4000-51J15BB*
575	24	–	4000-78J15BB*

* A three digit customer ID suffix will be assigned by the factory.
For Type AE Laydown Termination, replace BB in above part numbers with AE.

Outline Dimensions

Type BB Same Side Termination

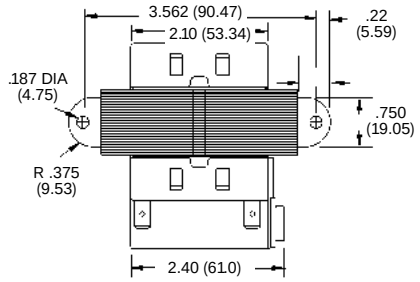

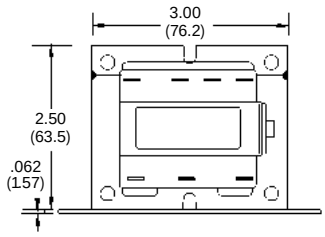

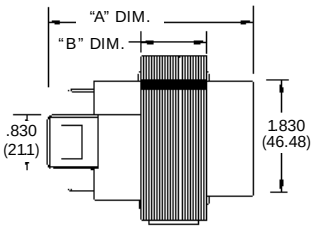

Type AE Laydown Termination - Internally Fused

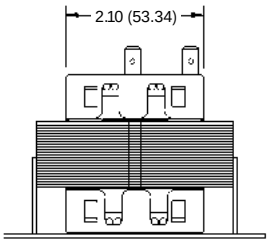

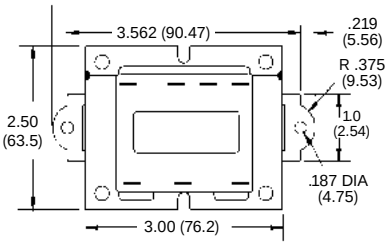

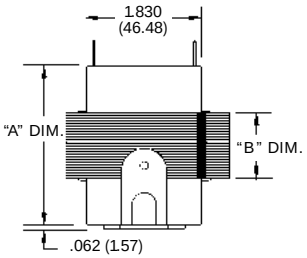

Type AE Laydown Termination - Integral Circuit Breaker

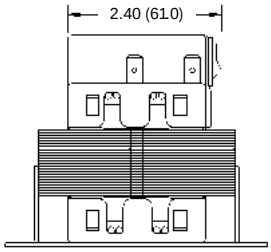

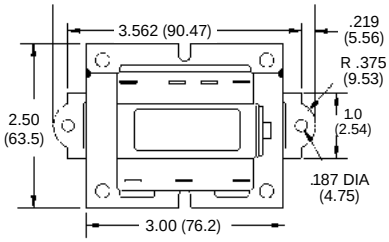

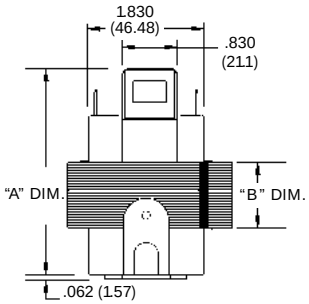

"A" and "B" Dimensions for 60VA & 75VA Models

	Internally Fused	w/ Integral Circuit Breaker
"A" Dimension [inches (mm)]	2.475 (62.86)	3.25 (82.55)
"B" Dimension [inches (mm)]	1.00 (25.4)	1.00 (25.4)

Dimensions are shown for reference purposes only.

Dimensions are in inches over (millimeters) unless otherwise specified.

Specifications and availability subject to change.

4700 series

UL 506 Transformer 60VA - 150VA Non-Fused Wire Leads or Quick Connects

File E102980

Users should thoroughly review the technical data before selecting a product part number. It is recommended that users also seek out the pertinent approvals files of the agencies/laboratories and review them to ensure the product meets the requirements for a given application.

Features

- Type K Foot Mount - features wire leads and a steel bracket welded to the bottom of the laminations for easy mounting.
- Type BB Same Side Termination - features quick connect terminals with line and load terminations on the same side of transformer.
- Multiple voltage combinations are available. Consult factory for availability.

Specifications

Wire Size: All leads are 18 AWG stranded 2/64" (.794 mm) insulation thickness. Standard parts have 12" (305 mm) total length with 1/2" (12.7 mm) strip.

Terminals: Standard male quick connects are .250" x .032" (6.35 x .81 mm). Other available quick connects include .187" x .032" (4.75 x .81 mm) and .187" x .020" (4.75 x .51 mm).

Frequency: 50/60 Hz.

Insulation Class: UL Class B (130°C).

Weight: 60VA – 36.8 oz. (1042 g); 100VA – 80 oz. (2270 g); 150VA – 83.2 oz. (2356 g).

Standard "999" Models Available

Primary V	Secondary V	60VA	100VA
120	24	4700-81L15K999	–
120/208/240/480	24	–	4700-08K18K999

For more details about standard models see Part Numbering System table at beginning of transformer section in this catalog .

Partial Listing of Custom Models

Primary V	Secondary V	100VA	150VA
120	24	4700-01K18K*	4700-01Z18K*
277	24	4700-03K18K*	4700-03Z18K*
480	24	4700-04K18K*	4700-04Z18K*
120/208/240/480	24	4700-08K18K*	–
208/240	24	4700-09K18K*	4700-09Z18K*
208/230/460	24	4700-12K18K*	–
208/240/480	24	4700-13K18K*	–
400	24	4700-48K18K*	4700-48Z18K*
575	24	4700-78K18K*	4700-78Z18K*
460/575	24	4700-130K18K*	4700-130Z18K*

* A three digit customer ID suffix will be assigned by the factory.

Outline Dimensions

Type K Foot Mount 60VA

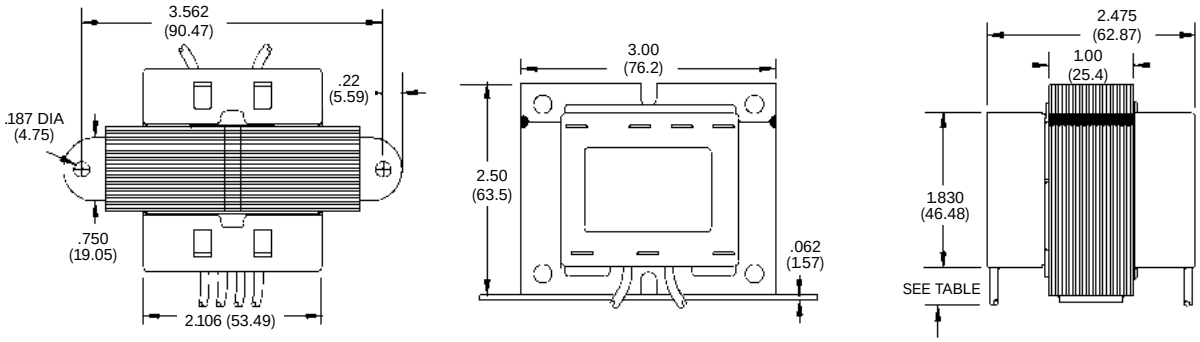

Type K Foot Mount 100VA

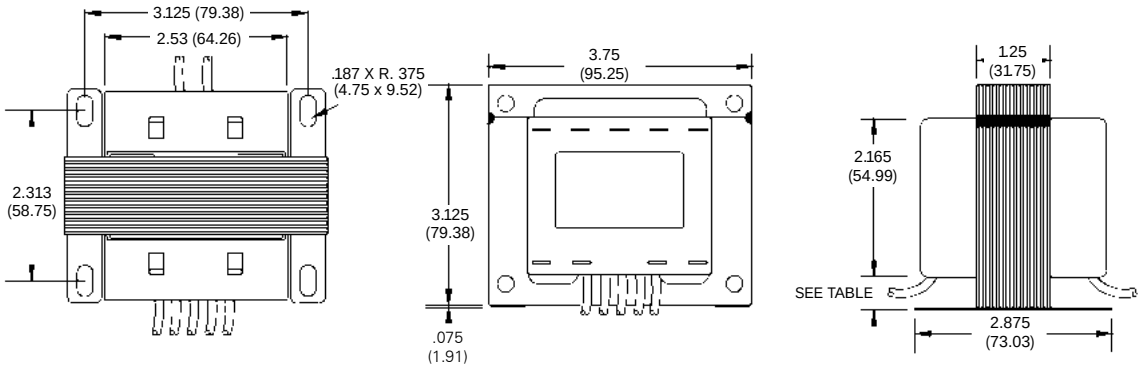

	Primary Leads							Secondary Leads	
Voltage	COM	120	208	240	277	480	575	24	VAC
Color	Black	White	Red	Orange	Brown	Black/Red	Gray	Blue	Yellow
Length [inches (mm)]	12 (305)	12 (305)	12 (305)	12 (305)	12 (305)	12 (305)	12 (305)	12 (305)	12 (305)
Strip Length [inches (mm)]	0.5 (12.7)	0.5 (12.7)	0.5 (12.7)	0.5 (12.7)	0.5 (12.7)	0.5 (12.7)	0.5 (12.7)	0.5 (12.7)	0.5 (12.7)

Dimensions are shown for reference purposes only.

Dimensions are in inches over (millimeters) unless otherwise specified.

Specifications and availability subject to change.

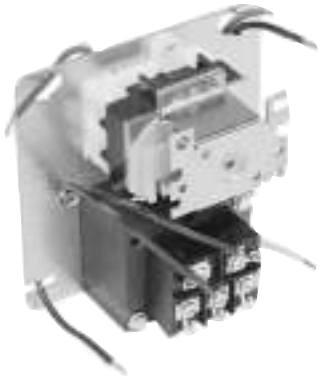

57 series

Transformer Relay for HVAC Applications

File E113772

Users should thoroughly review the technical data before selecting a product part number. It is recommended that users also seek out the pertinent approvals files of the agencies/laboratories and review them to ensure the product meets the requirements for a given application.

Features

- Cover mounts on conventional 4” square box.
- All leads terminate in the box.
- Leads are 8” (203.2 mm) long with 1/2” (12.7mm) stripped)
- Standard transformer is 40VA Class II Energy Limited. Other transformers are available.
- Five secondary terminations (two are hot) for thermostat connection and #6-32 screw termination is standard. Quick connects are optional.
- Assembled with choice of 9100 or 9400 series relays.
- Custom-built to meet customer requirements.

Relay Data @ 25°C

Arrangements: 1 Form A (SPST-NO) through 2 Form C (DPDT), depending upon relay selected

Rating: 9100 Series Relay: 12 FLA, 60 LRA, 15A resistive @ 125VAC; 6 FLA, 36 LRA, 15A resistive @ 240VAC; 3/4 HP @ 125/250VAC.
9400 Series Relay: 12 FLA, 60 LRA, 18A resistive @ 125VAC; 8 FLA, 48 LRA, 18A resistive @ 240VAC.

Specifications

Insulation Class: UL Class B (130°C).
Duty Cycle: Continuous.
Weight: 32 oz. (909 g) approximately

Ordering Information

57 series products are custom-built. Your Tyco Electronics sales engineer will need to consult with the factory to develop a model meeting your needs.

Standard part numbers listed below are more likely to be available from stock.

Custom parts only.

Outline Dimensions

Using 9100 Series Relay

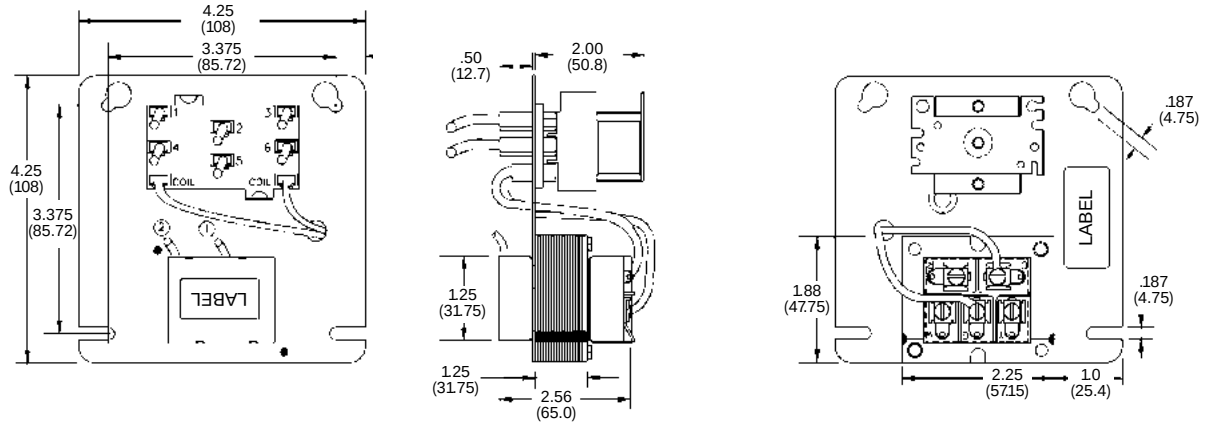

Using 9400 Series Relay

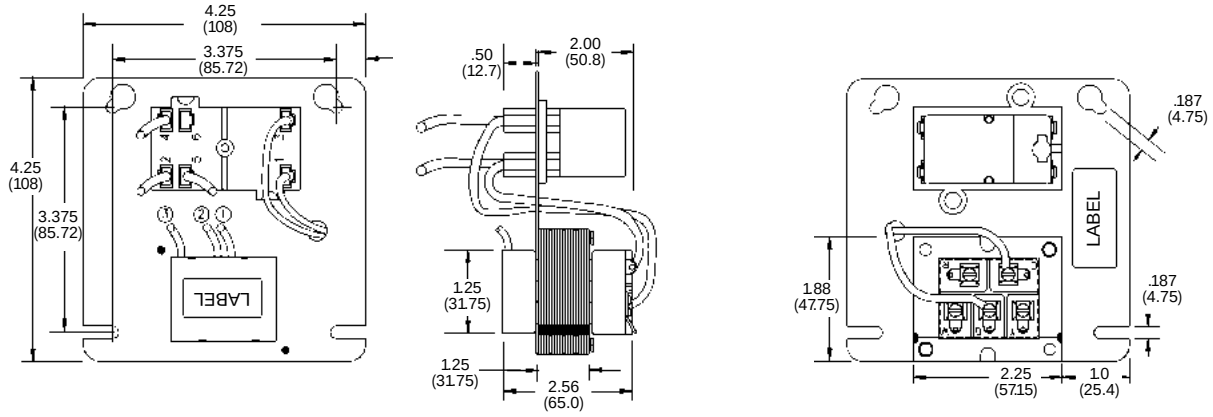

Dimensions are shown for reference purposes only.
Dimensions are in inches over (millimeters) unless otherwise specified.
Specifications and availability subject to change.
www.tycoelectronics.com
Technical support:
Refer to inside back cover.

2.5

Pilot Devices

Potentiometers

Modular Range

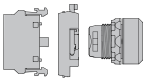

Potentiometer

Operator: Potentiometer

Description	Type	Order Code	Package Quantity	Weight Kg
Complete Potentiometers				
Black knob with integrated position indication and marking in white				
With Resistor 5 kohm				
Black Plastic Bezel	**MT-105B**	**1SFA 611 410 R1056**	1	0.040
Chrome Metal Bezel	**MT-305B**	**1SFA 611 410 R3056**	1	0.048
With Resistor 10 kohm				
Black Plastic Bezel	**MT-110B**	**1SFA 611 410 R1106**	1	0.040
Chrome Metal Bezel	**MT-310B**	**1SFA 611 410 R3106**	1	0.048
With Resistor 50 kohm				
Black Plastic Bezel	**MT-150B**	**1SFA 611 410 R1506**	1	0.040
Chrome Metal Bezel	**MT-350B**	**1SFA 611 410 R3506**	1	0.048

Knob without Resistor				
Black knob with integrated position indication and marking in white. For shaft diameter 6 -6.35 mm. Min. shaft length 20 mm.				
Black Plastic Bezel	**KT-100B**	**1SFA 616 410 R1006**	10	0.034
Chrome Metal Bezel	**KT-300B**	**1SFA 616 410 R3006**	10	0.042

Legend Plates Aluminum				
Symbol: see fig. (29.6 x 44.5 mm)	-	**SK 615 562-87**	10	0.002
Scale: 0-10 (48.5 x 44.5 mm)	-	**SK 615 562-88**	10	0.002
Scale: 0-50 (48.5 x 44.5 mm)	-	**1SFA 611 930 R1252**	10	0.002

Legend Plates

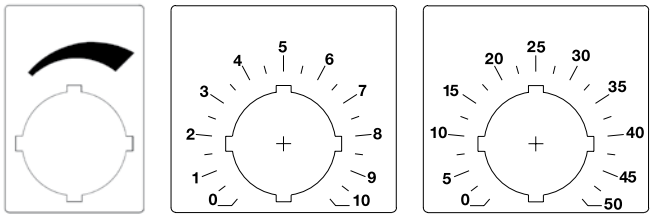

Buzzers

Buzzer

Operator: Buzzer

Description	Type	Order Code	Package Quantity	Weight Kg
Buzzers				
Black. Frequency: Approx. 2400 Hz. Loudness: Min 80 dB (A)/10 cm Rated Current: < 8 mA. Service Life:>5000 h Suitable for both 50 and 60 Hz networks				

Supply Voltage	Tone Type				
24 V AC/DC	Continuous	**KB1-4010**	**1SFA 616 401 R4010**	1x10	0.020
115 V AC/DC	Continuous	**KB1-4030**	**1SFA 616 401 R4030**	1x10	0.020
230 V AC	Continuous	**KB1-4040**	**1SFA 616 401 R4040**	1x10	0.020
24 V AC/DC	Pulsating	**KB1-4110**	**1SFA 616 401 R4110**	1x10	0.020
115 V AC/DC	Pulsating	**KB1-4130**	**1SFA 616 401 R4130**	1x10	0.020
230 V AC	Pulsating	**KB1-4140**	**1SFA 616 401 R4140**	1x10	0.020

Selector Switches
three-position, illuminated, short handle

How to order:

Alt.1 • Operator
+ Holder
+ Contact Block(s)
+ LED/Lamp Block

Alt.2 • Operator
+ Holder with Contact Block(s) and LED/Lamp Block

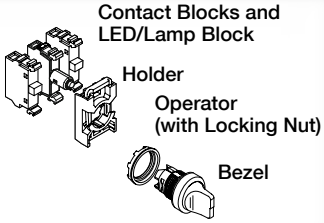

Bezel - How to order
Black Plastic - Standard
Chrome Metal - Replace '1' with '3' in Type and Order Codes

Bezel Options	Type	Order Code
Black Plastic	M3SS(X)-11X	1SFA611 21X R110X
Chrome Metal	M3SS(X)-31X	1SFA611 21X R310X

Selector Switch, short handle

Operator: Three-position Selector Switches (Light Bulb max 2W, not included)

Description		Type	Order Code	Package Quantity	Weight Kg
Short handle					
Maintained					
	Red	M3SS1-11R	1SFA 611 210 R1101	1x10	0.015
	Green	M3SS1-11G	1SFA 611 210 R1102	1x10	0.015
	Yellow	M3SS1-11Y	1SFA 611 210 R1103	1x10	0.015
	Blue	M3SS1-11L	1SFA 611 210 R1104	1x10	0.015
	Clear	M3SS1-11C	1SFA 611 210 R1108	1x10	0.015
Momentary, spring return from A to B and from C to B					
	Red	M3SS2-11R	1SFA 611 211 R1101	1x10	0.015
	Green	M3SS2-11G	1SFA 611 211 R1102	1x10	0.015
	Yellow	M3SS2-11Y	1SFA 611 211 R1103	1x10	0.015
	Blue	M3SS2-11L	1SFA 611 211 R1104	1x10	0.015
	Clear	M3SS2-11C	1SFA 611 211 R1108	1x10	0.015
Momentary, spring return from C to B					
	Red	M3SS3-11R	1SFA 611 212 R1101	1x10	0.015
	Green	M3SS3-11G	1SFA 611 212 R1102	1x10	0.015
	Yellow	M3SS3-11Y	1SFA 611 212 R1103	1x10	0.015
	Blue	M3SS3-11L	1SFA 611 212 R1104	1x10	0.015
	Clear	M3SS3-11C	1SFA 611 212 R1108	1x10	0.015
Momentary, spring return from A to B					
	Red	M3SS7-11R	1SFA 611 216 R1101	1x10	0.015
	Green	M3SS7-11G	1SFA 611 216 R1102	1x10	0.015
	Yellow	M3SS7-11Y	1SFA 611 216 R1103	1x10	0.015
	Blue	M3SS7-11L	1SFA 611 216 R1104	1x10	0.015
	Clear	M3SS7-11C	1SFA 611 216 R1108	1x10	0.015

Contacts actuated

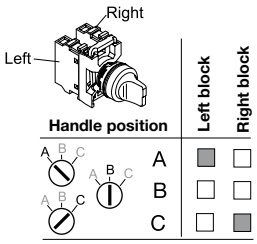

☐ Not actuated
■ Actuated

Contact Blocks and Holder see the fold-out page at the end of the catalog

Pilot lights and Buzzers

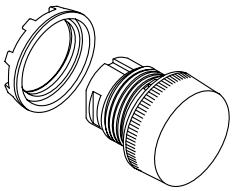

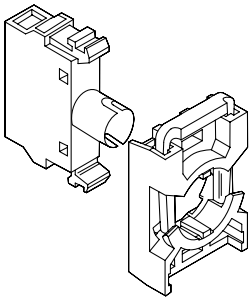

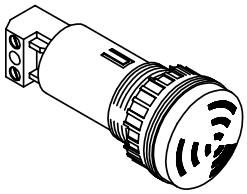

Pilot light head ①②

Lens color	Catalog No.	Ref. Code
Red	**ML1-100R**	1SFA 611 400 R1001
Green	**ML1-100G**	1SFA 611 400 R1002
Yellow	**ML1-100Y**	1SFA 611 400 R1003
Blue	**ML1-100L**	1SFA 611 400 R1004
White	**ML1-100W**	1SFA 611 400 R1005
Clear	**ML1-100C**	1SFA 611 400 R1008

Lamp blocks with holder ①

Supply voltage	Catalog No.	Ref. Code
For max. 2 W, 230 V AC and DC filament bulb or LED 230 V, 2 W X1 X2 115 V AC supply voltage.	**MCBH-001**	1SFA 611 605 R1200
For 60 V filament bulb max. 1.2 W 115 V ~ 60 V X1 1.2 W X2 230 V AC supply voltage.	**MCBH-002**	1SFA 611 605 R1300
For 130 V filament bulb max. 2 W 230 V ~ 130 V X1 2 W X2	**MCBH-003**	1SFA 611 605 R1400

Light diffusing lens

To improve illumination. *Note: Cannot be used with text cap.*

Description	Catalog No.	Ref. Code
The lens is used instead of text cap	**KA1-8005**	1SFA 616 920 R8005

Buzzers

Black. Frequency: Approx. 2400 Hz. Loudness: Min 80 dB (A)/10 cm
Rated current: ≤ 8 mA. Service life:>5000 h

Supply voltage	Tone	Catalog No.	Ref. Code
24 V AC/DC	Continuous	**KB1-4010**	1SFA 616 401 R4010
115 V AC/DC	Continuous	**KB1-4030**	1SFA 616 401 R4030
230 VAC	Continuous	**KB1-4040**	1SFA 616 401 R4040
24 V AC/DC	Pulsating	**KB1-4110**	1SFA 616 401 R4110
115 V AC/DC	Pulsating	**KB1-4130**	1SFA 616 401 R4130
230 V AC	Pulsating	**KB1-4140**	1SFA 616 401 R4140

① Bulb not included. See page 8.23
② For compact style, see page 8.33.

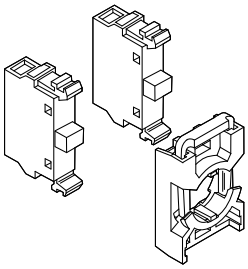

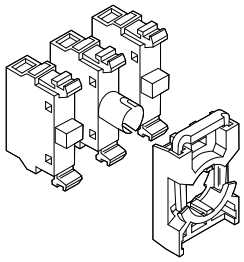

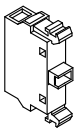

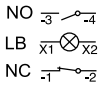

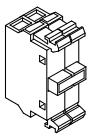

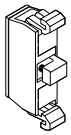

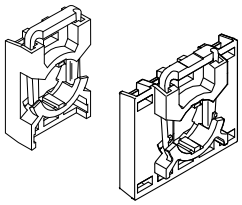

Contact block holders

Contact blocks and lamp blocks with holder for front mounting

Max. number of blocks in holder	Included blocks	Catalog No.	Ref. Code
For non-illuminated operators			
3	1 NC	**MCBH-01**	1SFA 611 605 R1110
3	1 NO	**MCBH-10**	1SFA 611 605 R1101
3	2 NC	**MCBH-02**	1SFA 611 605 R1120
3	2 NO	**MCBH-20**	1SFA 611 605 R1102
3	3 NC	**MCBH-03**	1SFA 611 605 R1130
3	3 NO	**MCBH-30**	1SFA 611 605 R1103
3	1 NO + 1 NC	**MCBH-11**	1SFA 611 605 R1111
3	1 NO + 2 NC	**MCBH-12**	1SFA 611 605 R1121
3	2 NO + 1 NC	**MCBH-21**	1SFA 611 605 R1112
For illuminated operators			
3	1 LB	**MCBH-001**	—
3	1 NC + 1 LB	**MCBH-011**	1SFA 611 605 R1210
3	1 NO + 1 LB	**MCBH-101**	1SFA 611 605 R1201
3	1 NO + 1 NC + 1 LB	**MCBH-111**	1SFA 611 605 R1211
3	2 NC + 1 LB	**MCBH-021**	1SFA 611 605 R1220
3	2 NO + 1 LB	**MCBH-201**	1SFA 611 605 R1202

Single contact blocks for front mounting

Contacts	Catalog No.	Ref. Code
1 NO	**MCB-10**	1SFA 611 610 R1001
1 NC	**MCB-01**	1SFA 611 610 R1010
1 NO with gold plated contacts	**MCB-10G**	1SFA 611 610 R1101
1 NC with gold plated contacts	**MCB-01G**	1SFA 611 610 R1110

Double contact block for front mounting

To be used together with MCBH5-00 when contact blocks in position 4- and 5- are needed.
Also when using MCBH-00 together with selector switch and contact block in position 3- is needed

Included blocks	Catalog No.	Ref. Code
2 NO	**MCB-20**	1SFA 611 610 R1002
2 NC	**MCB-02**	1SFA 611 610 R1020
1 NO + 1 NC	**MCB-11**	1SFA 611 610 R1011

Micro contact blocks for front mounting

Contacts	Catalog No.	Ref. Code
1 NO	**MCBL-10**	1SFA611612R1010
1 NC	**MCBL-01**	1SFA611612R1001

Holders

Description	Catalog No.	Ref. Code
Holders for front mounting		
For three blocks	**MCBH-00**	1SFA 611 605 R1100
For five blocks	**MCBH5-00**	1SFA 611 601 R1100

Accessories

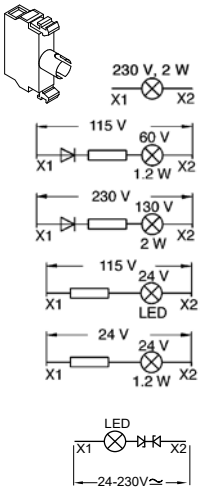

Single lamp blocks for front mounting, Ba 9s base

Description	Catalog No.	Ref. Code
For max. 2 W, 230 V AC and DC filament bulb or LED	**MLB-1**	1SFA 611 620 R1001
115 V AC supply voltage for 60 V filament bulb max. 1.2 W.	**MLB-2**	1SFA 611 620 R1002
230 V AC supply voltage for 130 V filament bulb max. 2 W	**MLB-3**	1SFA 611 620 R1003
115 V AC and DC supply voltage For 24 V LED	**MLB-4**	1SFA 611 620 R1004
24 V AC and DC supply voltage with resistor. Intended. for electronic circuits. The resistor limits the making current and protects against disturbances in the electronic circuit. For 24 V filament bulb	**MLB-5**	1SFA 611 620 R1005
With Zener diode, max 230V AC/DC, LEDs. Used in applications where voltage interference is a problem (i.e., the LED is visibly lit although control voltage is off.	**MLB-8**	1SFA 611 620 R1008

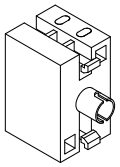

Transformer block
for pilot light

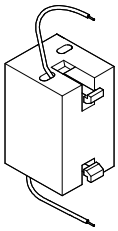

Transformer block
for illuminated operator switches

Transformer blocks

For 6 or 24 V filament bulb and 24 V LED. Rated power 1.5 W.

Primary voltage	Secondary voltage	Bulb Suffix LED	Bulb Suffix Filament	Catalog No.	Ref. Code
With lamp holder for pilot lights, front mounting, Ba 9s base					
Intended to supply a 1.2 W filament bulb.					
110 - 127 V AC	6 V AC	–	T1	**KTR1-1001**	1SFA 616 950 R1001
220 - 250 V AC	6 V AC	–	T2	**KTR1-1002**	1SFA 616 950 R1002
380 - 420 V AC	6 V AC	–	T3	**KTR1-1003**	1SFA 616 950 R1003
440 - 480 V AC	6 V AC	–	T4	**KTR1-1004**	1SFA 616 950 R1004
500 - 600 V AC	6 V AC	–	T5	**KTR1-1005**	1SFA 616 950 R1005
110 - 127 V AC	24 V AC ①	TL1	T6	**KTR1-1011**	1SFA 616 950 R1011
220 - 250 V AC	24 V AC ①	TL2	T7	**KTR1-1012**	1SFA 616 950 R1012
380 - 420 V AC	24 V AC ①	TL3	T8	**KTR1-1013**	1SFA 616 950 R1013
440 - 480 V AC	**24 V AC** ①	TL4	T9	**KTR1-1014**	1SFA 616 950 R1014
For illuminated operators ②					
Intended to supply a 1.2 W filament bulb mounted in lamp block MLB-1 (1SFA 611 620 R1001) only.					
110 - 127V AC	6 V AC	–	T1	**KTR1-2001**	1SFA 616 950 R2001
220 - 250 V AC	6 V AC	–	T2	**KTR1-2002**	1SFA 616 950 R2002
380 - 420 V AC	6 V AC	–	T3	**KTR1-2003**	1SFA 616 950 R2003
440 - 480 V AC	6 V AC	–	T4	**KTR1-2004**	1SFA 616 950 R2004
500 - 600 V AC	6 V AC	–	T5	**KTR1-2005**	1SFA 616 950 R2005
110 - 127 V AC	24 V AC ①	TL1	T6	**KTR1-2011**	1SFA 616 950 R2011
220 - 250 V AC	24 V AC ①	TL2	T7	**KTR1-2012**	1SFA 616 950 R2012
380 - 420 V AC	24 V AC ①	TL3	T8	**KTR1-2013**	1SFA 616 950 R2013
440 - 480 V AC	**24 V AC** ①	TL4	T9	**KTR1-2014**	1SFA 616 950 R2014

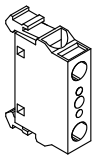

Diode block

Diode blocks

To be used if several lamps are to be connected to a common lamp-test pushbutton.
A diode must be connected in series with each lamp. The diode block snaps onto the lamp block or is placed at the side.

Description	Catalog No.	Ref. Code
Diode block	**MDB-1001**	1SFA 611 630 R1001

Diagram for lamp test with three diode block

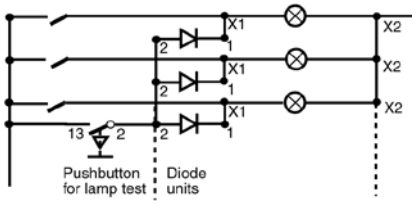

① Can be used with LED bulb
② To be used with with directly supplied lamp blocks only.

Accessories

LEDs

With one diode chip mounted on a Ba 9s base. Choose the same color for the LED and the lamp cap or else use a clear lamp cap.

For white light use white LED with clear lamp cap. At DC the lamp base have to be connected to cathode (-) and the bottom contact to anode (+).

Description				Catalog No.	Ref. Code
Color	**Rated current mA**	**Wave-length nm**	**Luminance mcd**		
Rated voltage 12 V, DC Service life >50 000 h					
Red	15	630	250	**KA2-2011**	1SFA 616 921 R2011
Green	15	525	1000	**KA2-2012**	1SFA 616 921 R2012
Yellow	15	592	250	**KA2-2013**	1SFA 616 921 R2013
Blue	15	470	450	**KA2-2014**	1SFA 616 921 R2014
White	15	x=0.31 y=0.32	600	**KA2-2015**	1SFA 616 921 R2015
Rated voltage 24 V, (AC)/DC ① Service life >50 000 h					
Red	15	630	250	**KA2-2021**	1SFA 616 921 R2021
Green	15	525	800	**KA2-2022**	1SFA 616 921 R2022
Yellow	15	592	250	**KA2-2023**	1SFA 616 921 R2023
Blue	15	470	400	**KA2-2024**	1SFA 616 921 R2024
White	15	x=0.31 y=0.32	500	**KA2-2025**	1SFA 616 921 R2025
Rated voltage 36 V, (AC)/DC ① Service life >50 000 h					
Red	12	630	250	**KA2-2031**	1SFA 616 921 R2031
Green	12	525	800	**KA2-2032**	1SFA 616 921 R2032
Yellow	12	592	250	**KA2-2033**	1SFA 616 921 R2033
Blue	12	470	400	**KA2-2034**	1SFA 616 921 R2034
White	12	x=0.31 y=0.32	500	**KA2-2035**	1SFA 616 921 R2035
Rated voltage 48 V, (AC)/DC ① Service life >50 000 h					
Red	12	630	200	**KA2-2041**	1SFA 616 921 R2041
Green	12	525	1700	**KA2-2042**	1SFA 616 921 R2042
Yellow	12	592	240	**KA2-2043**	1SFA 616 921 R2043
Blue	12	470	720	**KA2-2044**	1SFA 616 921 R2044
White	12	x=0.31 y=0.32	1200	**KA2-2045**	1SFA 616 921 R2045
Rated voltage 60 V, (AC)/DC ① Service life >50 000 h					
Red	10	630	160	**KA2-2051**	1SFA 616 921 R2051
Green	10	525	1400	**KA2-2052**	1SFA 616 921 R2052
Yellow	10	592	200	**KA2-2053**	1SFA 616 921 R2053
Blue	10	470	600	**KA2-2054**	1SFA 616 921 R2054
White	10	x=0.31 y=0.32	1000	**KA2-2055**	1SFA 616 921 R2055
Rated voltage 110-130 V, AC ① Service life 25 000 h					
Red	4-6	630	60-100	**KA2-2131**	1SFA 616 921 R2131
Green	4-6	525	500-850	**KA2-2132**	1SFA 616 921 R2132
Yellow	4-6	592	70-120	**KA2-2133**	1SFA 616 921 R2133
Blue	4-6	470	220-350	**KA2-2134**	1SFA 616 921 R2134
White	4-6	x=0.31 y=0.32	350-600	**KA2-2135**	1SFA 616 921 R2135
Rated voltage 110-130 V, AC/DC ① Service life 25 000 h					
Red	4-6	630	60-100	**KA2-2141**	1SFA 616 921 R2141
Green	4-6	525	500-850	**KA2-2142**	1SFA 616 921 R2142
Yellow	4-6	592	70-120	**KA2-2143**	1SFA 616 921 R2143
Blue	4-6	470	220-350	**KA2-2144**	1SFA 616 921 R2144
White	4-6	x=0.31 y=0.32	350-600	**KA2-2145**	1SFA 616 921 R2145
Rated voltage 230 V, AC ① Service life 25 000 h					
Red	4	630	60	**KA2-2221**	1SFA 616 921 R2221
Green	4	525	500	**KA2-2222**	1SFA 616 921 R2222
Yellow	4	592	70	**KA2-2223**	1SFA 616 921 R2223
Blue	4	470	220	**KA2-2224**	1SFA 616 921 R2224
White	4	x=0.31 y=0.32	350	**KA2-2225**	1SFA 616 921 R2225
Rated voltage 230 V, AC/DC ① Service life 25 000 h					
Red	4	630	60	**KA2-2231**	1SFA 616 921 R2221
Green	4	525	500	**KA2-2232**	1SFA 616 921 R2222
Yellow	4	592	70	**KA2-2233**	1SFA 616 921 R2223
Blue	4	470	220	**KA2-2234**	1SFA 616 921 R2224
White	4	x=0.31 y=0.32	350	**KA2-2235**	1SFA 616 921 R2225

① At AC the luminance is decreased with 30 % and there is also a slight flickering.

MLBL-01G

Section 2.5.5 - LED Blocks

MLBL-01G LED block

General Information

Extended Product Type	MLBL-01G
Product ID	1SFA611621R1012
EAN	7320500373002
Catalog Description	MLBL-01G LED block
Long Description	Modular LED block - 24V AC / DC, integrated LED - Green - Illuminated

Ordering

EAN	7320500373002
Minimum Order Quantity	10 piece
Customs Tariff Number	85369001

Dimensions

Product Net Width	0.044 m
Product Net Height	0.010 m
Product Net Depth / Length	0.035 m
Product Net Weight	0.01 kg

Container Information

Package Level 1 Width	0.11 m
Package Level 1 Height	0.01 m
Package Level 1 Depth / Length	0.15 m
Package Level 1 Gross Weight	0.01 kg

Additional Information

Accessory Type	LED and lamp blocks
Color	Green
Illumination	Illuminated
Lamp Type	24V AC / DC, integrated LED
Luminance	1500 millicandela
Mounting Type	Front mounting
Product Main Type	MLBL

Product Name	LED block
Product Range	Modular range
Product Type	MLBL
Rated Current (I_n)	9.2 mA
Rated Operational Voltage	24 V AC/DC
Suitable For	MP1 MP2 MP3 MP4 MPD1 MPD2 MPD3 MPD4 MPD5 MPD11 MPD12 MPD13 MPD14 MPD15 MPD16 MPM1 MPM2 KP6 MPET3 MPEP3 MPEK3 MPET4 MPEP4 MPEK4 MPMT3 MPMT4 MPMP3 MPMP4 M2SS1 M2SS2 M2SS3 M2SS4 M2SS5 M2SS6 M3SS1 M3SS2 M3SS3 M3SS4 M3SS5 M3SS6 M3SS7 M3SS8 M3SSC1 M3SSC2 M3SSC3 M3SSC4 M3SSC5 M3SSC6 M3SSC7 M3SSC8 M2SSK1 M2SSK2 M2SSK3 M3SSK1 M3SSK2 M3SSK3 MTS1 MTS2 MTS3 MJS1 MJS2 MJS5 MJS6 MJS7 MJS8 MJS11

	MJS12
Wave Length	520 nm

—

Certificates and Declarations (Document Number)

Data Sheet, Technical Information	1SFC151005C0201
Declaration of Conformity - CE	1SFA1-83
Environmental Information	1SFC151010D0201
Instructions and Manuals	1SFC151005C0201

—

Classifications

E-nummer	3705055
ETIM 4	EC002024 - Accessories for control circuit devices
ETIM 5	EC000204 - Lamp holder block for control circuit devices
ETIM 6	EC000204 - Lamp holder block for control circuit devices
ETIM 7	EC000204 - Lamp holder block for control circuit devices
Object Classification Code	E
UNSPSC	39120000
WEEE Category	5. Small Equipment (No External Dimension More Than 50 cm)

—

Categories

Low Voltage Products and Systems → Control Products → Pilot Devices → Pilot Devices Accessories

MLBL-01R

MLBL-01R LED block

General Information

Extended Product Type	MLBL-01R
Product ID	1SFA611621R1011
EAN	7320500372906
Catalog Description	MLBL-01R LED block
Long Description	Modular LED block - 24V AC / DC, integrated LED - Red - Illuminated

Ordering

EAN	7320500372906
Minimum Order Quantity	10 piece
Customs Tariff Number	85369001

Dimensions

Product Net Width	0.044 m
Product Net Height	0.010 m
Product Net Depth / Length	0.035 m
Product Net Weight	0.01 kg

Container Information

Package Level 1 Width	0.11 m
Package Level 1 Height	0.01 m
Package Level 1 Depth / Length	0.15 m
Package Level 1 Gross Weight	0.01 kg

Additional Information

Accessory Type	LED and lamp blocks
Color	Red
Illumination	Illuminated
Lamp Type	24V AC / DC, integrated LED
Luminance	250 millicandela
Mounting Type	Front mounting
Product Main Type	MLBL

Product Name	LED block
Product Range	Modular range
Product Type	MLBL
Rated Current (I_n)	9.9 mA
Rated Operational Voltage	24 V AC/DC
Suitable For	MP1 MP2 MP3 MP4 MPD1 MPD2 MPD3 MPD4 MPD5 MPD11 MPD12 MPD13 MPD14 MPD15 MPD16 MPM1 MPM2 KP6 MPET3 MPEP3 MPEK3 MPET4 MPEP4 MPEK4 MPMT3 MPMT4 MPMP3 MPMP4 M2SS1 M2SS2 M2SS3 M2SS4 M2SS5 M2SS6 M3SS1 M3SS2 M3SS3 M3SS4 M3SS5 M3SS6 M3SS7 M3SS8 M3SSC1 M3SSC2 M3SSC3 M3SSC4 M3SSC5 M3SSC6 M3SSC7 M3SSC8 M2SSK1 M2SSK2 M2SSK3 M3SSK1 M3SSK2 M3SSK3 MTS1 MTS2 MTS3 MJS1 MJS2 MJS5 MJS6 MJS7 MJS8 MJS11

	MJS12
Wave Length	620 nm

—

Certificates and Declarations (Document Number)

Data Sheet, Technical Information	1SFC151005C0201
Declaration of Conformity - CE	1SFA1-83
Environmental Information	1SFC151010D0201
Instructions and Manuals	1SFC151005C0201

—

Classifications

E-nummer	3705054
ETIM 4	EC002024 - Accessories for control circuit devices
ETIM 5	EC000204 - Lamp holder block for control circuit devices
ETIM 6	EC000204 - Lamp holder block for control circuit devices
ETIM 7	EC000204 - Lamp holder block for control circuit devices
Object Classification Code	E
UNSPSC	39120000
WEEE Category	5. Small Equipment (No External Dimension More Than 50 cm)

—

Categories

Low Voltage Products and Systems → Control Products → Pilot Devices → Pilot Devices Accessories

2.6

Electrical Enclosure

Section 2.6.1
Electrical Enclosure

SAGINAW CONTROL & ENGINEERING
Your Enclosure Source ®

SCE-60XEL6118LP

Product Specifications:

Part Number: SCE-60XEL6118LP
Description: 2DR XEL Enclosure
Height: 60.00"
Width: 61.00"
Depth: 18.00"
Catalog Page: 164
Est. Ship Weight: 600.00 lbs

Construction
- 0.104 In. carbon steel.
- Seams continuously welded and ground smooth.
- Flange trough collar around all sides of door opening.
- Pour in place oil & water resistant gasket
- Concealed hinges.
- Removable and interchangeable doors.
- 3-point latching mechanism.
- Removable print pocket.
- Lifting eyes for easy handling.
- Ground studs on door and body.
- Collar studs 3/8-16 provided for mounting optional panels.
- 15 In. removable floor stand.
- Removable center post.
- Mechanical interlock.
- No door stiffeners required.
- Black zinc die cast coinproof/padlocking handle on main door of disconnect enclosures. Black zinc die cast padlocking handle on all other doors.
- Provisions for light kit.
- Hole plugs provided to seal holes in bottom of enclosure.

Application
Designed to house electrical equipment and provide protection from dirt, dust, oil and water and to house most standard type disconnects.

Finish
ANSI-61 gray powder coating inside and out. Optional sub-panels are powder coated white.

Industry Standards - (IS4)
- NEMA Type 3R, 4, 12 and Type 13
- UL Listed Type 3R, 4 and 12
- CSA Type 3R, 4 and 12
- IEC 60529
- IP 66

Notes
Disconnect switch (or circuit breaker and operating mechanism) are not furnished with this enclosure.

Special Instructions apply for IS3, IS4 and IS6 to maintain the environmental rating of Type 3R for these parts. Instructions are located on the enclosure door. Drip shield is required on IS3, drip shield is recommended on IS4 and IS6. Drain holes are required on all.

Optional Accessories
SCE-13ELJEXPP Pocket, Exterior Print
SCE-19ELJEXPP Pocket, Exterior Print
SCE-60P60 Subpanel, Bent
SCE-60P60GALV Subpanel, Bent Galvanized
SCE-BP5618 Plate, Barrier
SCE-BVK Breather Vent
SCE-DF60EL60 Panel, Dead Front (Enviroline Floor Mount)
SCE-DS60N4 Shield, Drip
SCE-FS1212 Shelf, Folding
SCE-FS1818 Shelf, Folding
SCE-FS2424 Shelf, Folding
SCE-LF18 Fixture, LED Light
SCE-LF18NO Fixture, LED Light w/o Outlet

Similar Part Numbers
SCE-60XEL4912LP2DR XEL Enclosure
SCE-60XEL4918LP2DR XEL Enclosure
SCE-60XEL4924LP2DR XEL Enclosure
SCE-60XEL6112LP2DR XEL Enclosure
SCE-60XEL6124LP2DR XEL Enclosure
SCE-72X7312LP2DR X LP Enclosure
SCE-72X7318LP2DR X LP Enclosure
SCE-72X7324LP2DR X LP Enclosure
SCE-72XEL6112LP2DR XEL Enclosure
SCE-72XEL6118LP2DR XEL Enclosure

Installation Information
- Square D Flange Mounted, Disconnects and Circuit Breakers
- Gould Flange Mounted, Disconnects and Circuit Breakers
- Bussmann Flange Mounted, Disconnects and Circuit Breakers
- Allen-Bradley Flange Mounted, Disconnects and Circuit Breakers
- Siemens Flange Mounted, Disconnects and Circuit Breakers
- GE Flange Mounted, Disconnects and Circuit Breakers
- ABB Flange Mounted, Disconnects and Circuit Breakers
- Moller Flange Mounted, Disconnects and Circuit Breakers
- Cutler-Hammer Flange Mounted, Disconnects and Circuit Breakers
- LED Light Fixture
- Drip Shield Kit Assembly
- Folding Shelf Hole Pattern
- Mechanical Defeater (2018 Rev)
- Mechanical Defeater (2018 Rev) Video
- Dead Front 2 Door W/Disconnect Installation Instructions
- Hole Seal
- Service Parts Free Standing & Floor Mount Enclosures
- Hole Seal
- LSis Flange Mounted Disconnect and Circuit Breakers

UF15PC series

MECHATRONICS®

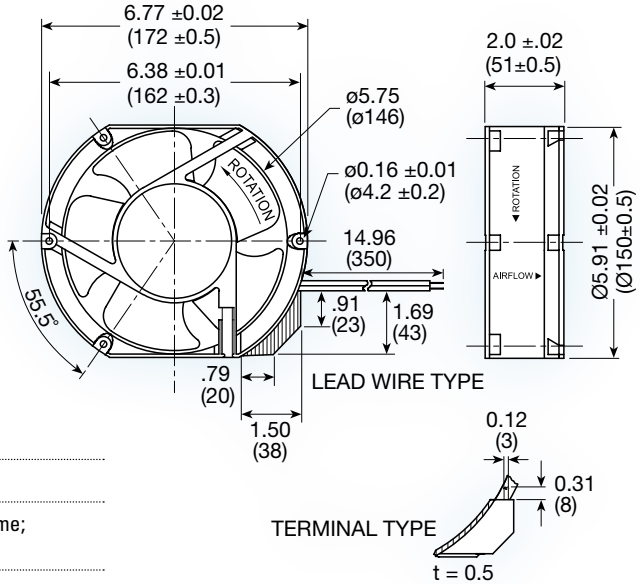

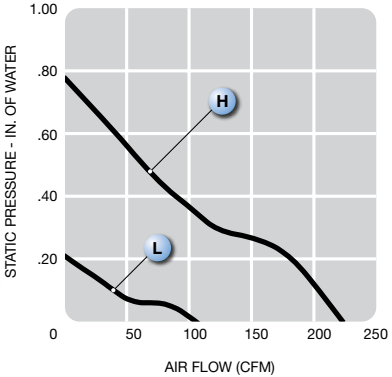

(172 x 150 x 51 mm)
6.77 x 5.91 x 2.0 inches

Operating voltage:	115 or 230 VAC
Construction:	aluminum die cast frame; UL94V-0 PBT impeller
Bearing option:	ball bearing
Motor:	permanent split capacitor
Air Flow:	exhaust over struts
Connection:	terminal or 22 AWG lead wire
Protection:	thermal
Option:	dual voltage 115/130VAC; IP55; IP55 + salt fog, tachometer output

Model No.	Rated Voltage	Freq.	Input Power	Rated Cur.	Locked Cur.	Speed	Air Volume		Max. Static Pressure (H_2O)		Sound Noise	Weight
	V	HZ	W	A	A	RPM	M³/Min.	CFM	MM	INCH	dbA	kg
UF15PC12 -__H	115	60	31	0.25	0.43	3,400	6.4	226	20.0	0.79	58	0.80
UF15PC23 -__H	230	60	29	0.12	0.19	3,400	6.4	226	20.0	0.79	58	0.80
UF15PC12 -__L	115	60	31	0.15	0.20	1,700	3.0	106	5.5	0.22	37	0.80
UF15PC23 -__L	230	60	29	0.07	0.09	1,700	3.0	106	5.5	0.22	37	0.80

Filterfan PF 42500, PF 43000 / Exhaust Filter PFA 40000

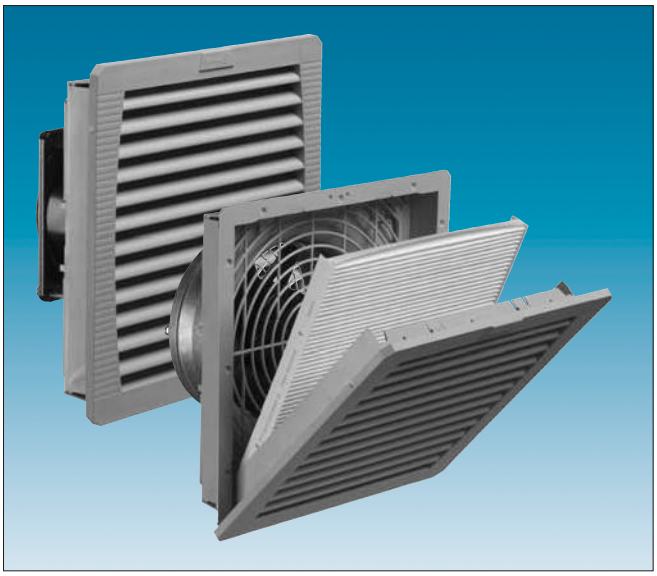

- Maintains a UL Tested NEMA Type 12 seal against enclosure
- UL Recognized to UL 508a, category NITW2/8, UL File #E175229, CE approved for European use
- Patented "Click & Fit" design provides a hardware free installation!
- Plastic made from strong, heat resistant (ABS-FR), UL 94 VO fire approved material

Options: EMC, IP55, Light Grey or Black Grills

NEMA Type

Approvals

Mounting

Airflow data	PF 42500	PF 43000	PFA 40000
Filter material	NEMA Type 12 Filtermat		
Unimpeded airflow	94 CFM	169 CFM	-
Capacity free-flow	53 W/K	I88 W/K	-
Airflow in combination (Filterfan + Exhaust Filter)	67 CFM (PF 42500 + PFA 40000)	142 CFM (PF 43000 + PFA 40000)	-
Capacity in combination (Filterfan + Exhaust Filter)	38 W/K (PF 43000 + PFA 40000)	69 W/K (PF 43000 + PFA 40000)	-
Max. static pressure (Airflow = 0 m³/h)	49 Pa	112 Pa	-
Filtration efficiency	91%		
Filter material grade	G 4 (DIN EN 779)		
Duty cycle	100%		-

Technical data	PF 42500		PF 43000		PFA 40000
	AC	DC	AC	DC	
Outside dimensions in mm (height x width x installation depth)	252 x 252 x 97		252 x 252 x 113	252 x 252 x 97	252 x 252 x 38
Bearing type / Lagerart	ball bearings				-
Fitting position / Einbaulage	any, horizontal airflow preferred				any
Construction	housing and guard of sprayed thermoplastic, self-extinguishing, UL 94 VO				
Weight	1.18 kg	0.92 kg	1.67 kg	1.51 kg	0.46 kg
Safety protection	in accordance with / gemäß DIN 31 001				-
Color	RAL 7035, RAL 7032 or black				
Connections / Anschlussart	cage clamp				-

Electrical data	PF 42500				
	AC 50 Hz / 60 Hz			DC	
Rated voltage +/- 10%	230 V		115 V		24 V
Power consumption	19 W / 18 W		20 W / 20 W		4,7 W
	PF 43000				
	AC 50 Hz / 60 Hz			DC	
Rated voltage +/- 10%		230 V	115 V		24 V
Power consumption		45 W / 39 W	40 W / 40 W		12 W

Airflow data:

PF 42500 / PF 43000

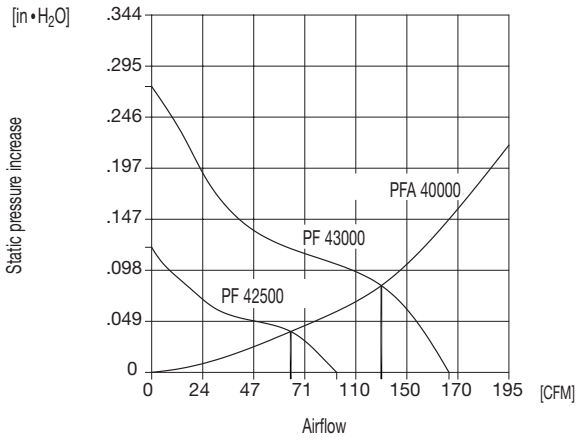

cutout:

PF 42500, PF 43000 + PFA 40000

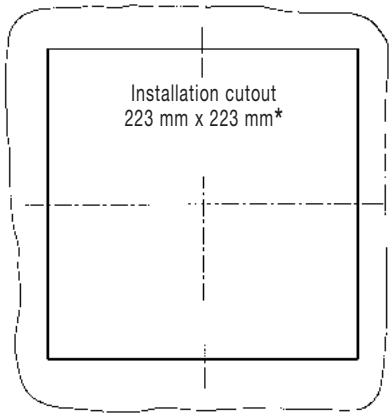

Mechanical data:

PF 42500, PF 43000

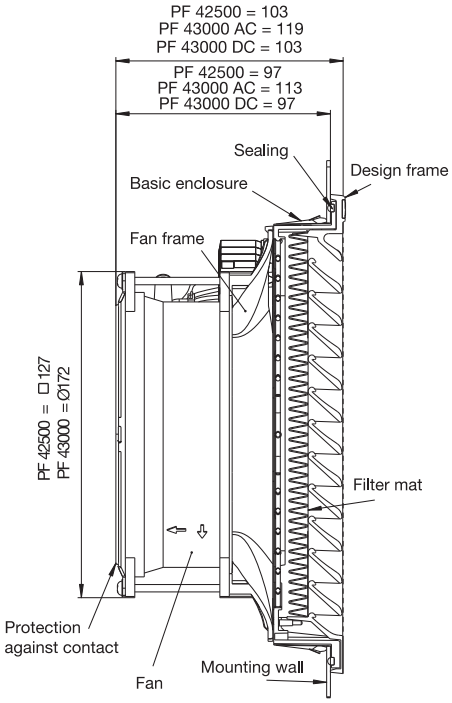

PF 42500 PF 43000, PFA 40000

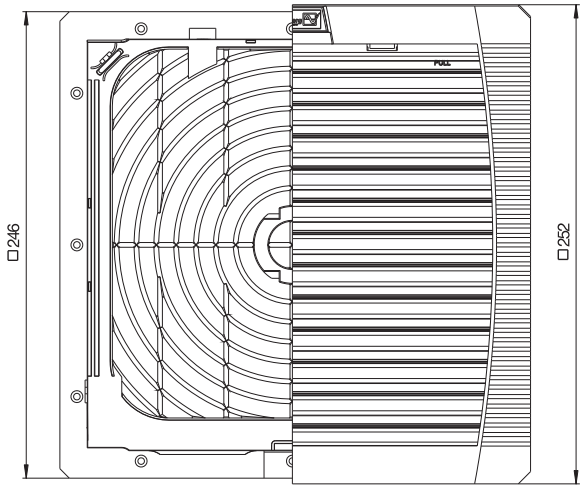

PFA 40000

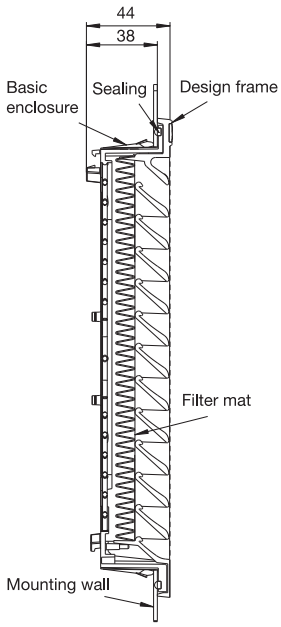

Supplementary data	PF 42500	PF 43000	PFA 40000
Operating temperature	– 15 °C (- 5 °F) to / bis + 55 °C (+ 131 °F)		
Storage temperature	– 20 °C (- 4 °F) to / bis + 70 °C (+ 158 °F)		
Max. relative humidity	90%		
System of protection	NEMA Type 12, IP 55 (EN 60 529), when installed as specified		
Basic Accessories	parts kit filter mat, user manual radiant heater, fan heater, thermostat, hygrostat		
Approvals	UL Recognized		
* Tolerance installation cutout	177 + 1/-0 thickness of material to 2 mm 178 + 1/-0 thickness of material > 2 mm < 3 mm		

Section 2.6.4
Filter Fan

Pfannenberg
ELECTRO-TECHNOLOGY FOR INDUSTRY

PF 43000

FILTERFANS 4.0 ™

Airflow rate up to 155 CFM

Our PF 43000 (NEMA Type 12) Filterfans 4.0™ **reach a particularly high airflow and at the same time provide an IP 55, Type 12 system of protection with our flow optimized fins and rotor blades**. The fluted filter mat's folded structure provides an unrivalled airflow guaranteeing Type 12 protection, while also extending the filters lifetime 300% longer than conventional filter media. **Color:** RAL 7035 (light grey); also available in RAL 9011 (black)

PF 43000 FILTERFANS®			
AVAILABLE VOLTAGES ± 10%	115 V	230 V	24 VDC
PART NUMBER	11643154055 (Lt. Grey)	11643104055 (Lt. Grey)	11643804055 (Lt. Grey)
	11643154050 (Black)	11643104050 (Black)	11643804050 (Black)
DESIGN (housing and protection against accidental contact)	self-extinguishing, UL 94 VO injection-molded thermoplastic		
SERVICE LIFE L10 (+ 40 °C)	40,000 h	40,000 h	80,000 h
WEIGHT (lb)	3.68	3.68	3.33
COLOR	RAL 7035 (Lt. Grey) RAL 9011 (Black)		
NOISE LEVEL (EN ISO 3741)	46 dB (A)	46 dB (A)	42 dB (A)
CONNECTION TYPE	spring-type terminal		
BEARING TYPE	ball bearing		
APPROVALS	UL, cUL, CE, (on request: GOST)		
POWER CONSUMPTION (W)	40	39	12
W x H x D (in)	9.92 x 9.92 x 4.69		
CUT-OUT DIMENSIONS (mm)	223 x 223		
SYSTEM OF PROTECTION (EN 60529)	IP 55		
System of protection (UL 50)	NEMA Type 12 - fluted filter		
FILTER MAT QUALITY CLASS	G 4		
UNIMPEDED AIRFLOW	155 CFM		
AIRFLOW RATE IN COMBINATION (PF + PFA 20.000)	122 CFM		
FILTRATION EFFIICIENCY	91%		
FILTER MEDIA			
	Part No.	Description	Size
Used With PF 42500/43000, PFA 40000	18611600036	PF/PFA 4xxxx - 5 Pack	8.35 in X 7.87 in X .67 in (212mm X 200mm X 17mm)

3 Instrumentation

PN2294

Section 3.1.1
Pressure Transmitter

Pressure sensor with display

PN-010-REN14-MFRKG/US/ /V

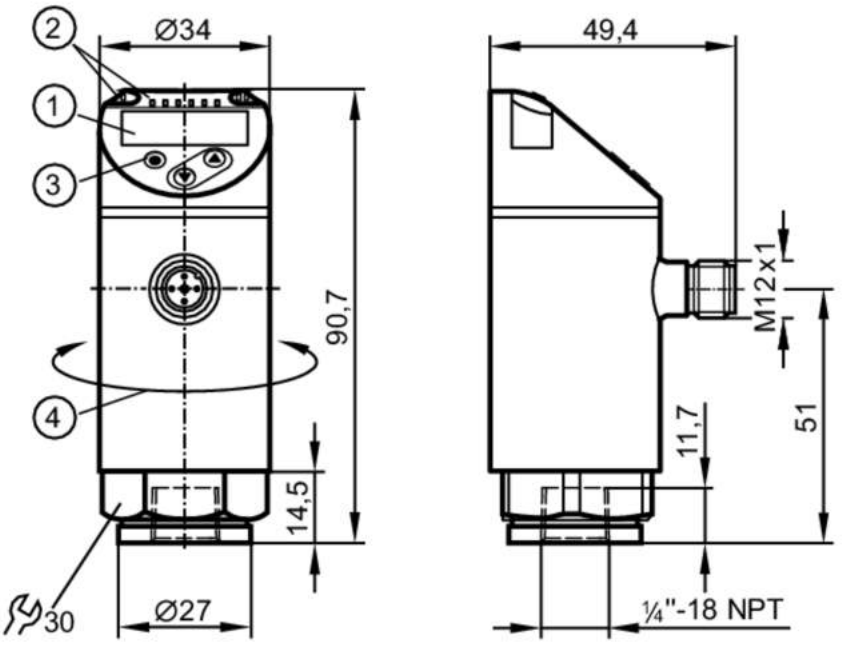

1 alphanumeric display 4-digit red/green
2 LEDs Display unit / switching status
3 programming button
4 upper part of the housing can be rotated 345°

Made in Germany

Application				
Measuring element		ceramic-capacitive pressure measuring cell		
Application		for industrial applications		
Media		liquids and gases		
Medium temperature	[°C]	-25...80		
Pressure rating		1087 psi	75 bar	7.5 MPa
Min. bursting pressure		2175 psi	150 bar	15 MPa
Vacuum resistance	[mbar]	-1000		
Type of pressure		relative pressure		
MAWP (for applications according to CRN)		725 psi	50 bar	5 MPa

Electrical data		
Operating voltage	[V]	18...30 DC; (according to EN 50178 SELV/PELV)
Current consumption	[mA]	< 35
Min. insulation resistance	[MΩ]	100; (500 V DC)
Protection class		III
Reverse polarity protection		yes
Power-on delay time	[s]	0.3
Integrated watchdog		yes

PN2294

Pressure sensor with display

PN-010-REN14-MFRKG/US/ /V

Outputs		
Total number of outputs		2
Output signal		switching signal; analogue signal; IO-Link; (configurable)
Number of digital outputs		2
Output function		normally open / normally closed; (parameterisable)
Max. voltage drop switching output DC	[V]	2
Permanent current rating of switching output DC	[mA]	250
Switching frequency DC	[Hz]	< 500
Number of analogue outputs		1
Analogue current output	[mA]	4...20; (scalable 1:5)
Max. load	[Ω]	500
Analogue voltage output	[V]	0...10; (scalable 1:5)
Min. load resistance	[Ω]	2000
Electrical design		PNP/NPN
Short-circuit protection		yes
Type of short-circuit protection		pulsed
Overload protection		yes

Measuring/setting range			
Measuring range	-14.6...145 psi	-1...10 bar	-0.1...1 MPa
Set point SP	-13.6...145 psi	-0.94...10 bar	-0.094...1 MPa
Reset point rP	-14.2...144.4 psi	-0.98...9.96 bar	-0.098...0.996 MPa
Analogue start point	-14.6...116 psi	-1...8 bar	-0.1...0.8 MPa
Analogue end point	14.6...145 psi	1...10 bar	0.1...1 MPa
In steps of	0.2 psi	0.02 bar	0.002 MPa

Accuracy / deviations		
Switch point accuracy	[% of the span]	< ± 0,4; (Turn down 1:1)
Repeatability	[% of the span]	< ± 0,1; (with temperature fluctuations < 10 K; Turn down 1:1)
Characteristics deviation	[% of the span]	< ± 0,25 (BFSL) / < ± 0,5 (LS); (Turn down 1:1; BFSL = Best Fit Straight Line; LS = limit value setting)
Hysteresis deviation	[% of the span]	< ± 0,1; (Turn down 1:1)
Long-term stability	[% of the span]	< ± 0,05; (Turn down 1:1; per 6 months)
Temperature coefficient zero point	[% of the span / 10 K]	0,2; (-25...80 °C)
Temperature coefficient **span**	[% of the span / 10 K]	0,2; (-25...80 °C)

Response times		
Response time	[ms]	< 1.5
Delay time programmable dS, dr	[s]	0...50
Damping for the switching output dAP	[s]	0...4
Damping for the analogue output dAA	[s]	0...4
Max. response time analogue output	[ms]	3

PN2294

Pressure sensor with display

PN-010-REN14-MFRKG/US/ /V

Software / programming			
Parameter setting options		hysteresis / window; normally open / normally closed; switch-on/ switch-off delay; Damping; Display unit; current/voltage output	
Interfaces			
Communication interface		IO-Link	
Transmission type		COM2	
IO-Link revision		1.1	
SDCI standard		IEC 61131-9	
IO-Link device ID		473 d / 00 01 d9 h	
Profiles		Smart Sensor: Process Data Variable; Device Identification, Device Diagnosis	
SIO mode		yes	
Required master port type		A	
Process data analogue		1	
Process data binary		2	
Min. process cycle time	[ms]	2.3	
Operating conditions			
Ambient temperature	[°C]	-25...80	
Storage temperature	[°C]	-40...100	
Protection		IP 65; IP 67	
Tests / approvals			
EMC		DIN EN 61000-6-2	
		DIN EN 61000-6-3	
Shock resistance		DIN EN 60068-2-27	50 g (11 ms)
Vibration resistance		DIN EN 60068-2-6	20 g (10...2000 Hz)
MTTF	[years]	138	
UL approval		UL Approval no.	J012
Pressure Equipment Directive		Sound Engineering Practice; can be used for group 2 fluids; group 1 fluids on request	
Mechanical data			
Weight	[g]	221.5	
Materials		stainless steel (1.4404 / 316L); PBT+PC-GF30; PBT-GF20; PC	
Materials (wetted parts)		stainless steel (1.4404 / 316L); Al2O3 (96 %; ceramics); FKM	
Min. pressure cycles		100 million	
Tightening torque	[Nm]	> 50; (depends on lubrication, seal and pressure rating)	
Process connection		threaded connection 1/4 NPT internal thread	
Restrictor element integrated		no (can be retrofitted)	
Displays / operating elements			
Display		Display unit	3 x LED, green (bar, psi, MPa)
		switching status	2 x LED, yellow
		measured values	alphanumeric display, red/green 4-digit
Remarks			
Pack quantity		1 pcs.	
Electrical connection			
Connector: 1 x M12; Contacts: gold-plated			

efectorsoo

ifm electronic

Pressure sensors

PX3224

Electronic pressure sensor
PX

Process connection ¼"NPT A / M5 I

Analog output

Measuring range
0...100 PSI

CE c UL us LISTED

Application	**Type of pressure: relative pressure Liquids and gases**
Electrical design	**DC**
Output	**4...20 mA analog**
Operating voltage [V]	9.6...32 DC
Reverse polarity protection	yes
Overload protection	yes
Analog output	4...20 mA
Load for analog output [ohms]	max. (Ub - 9.6 V) x 50; 720 at Ub = 24 V
Pressure rating [PSI]	1087
Bursting pressure min. [PSI]	2175
Accuracy / deviations (in % of the span)	
Characteristics deviation *)	< ± 0.35 (BFSL) / < ± 0.75 (LS)
Repeatability **)	< 0.15
Long-term stability ***)	< ± 0.05
Temperature coefficients (TEMPCO) in the temperature range 0...80° C (in% of the span per 10 K)	
greatest TEMPCO of the zero point	0.2
greatest TEMPCO of the span	0.3

efectorsoo ifm electronic

PX3224

Step response time analogue output [ms]	3	
Ambient temperature [°C]	-25...80	
Medium temperature [°C]	-25...90	
Storage temperature [°C]	-40...100	
Protection	IP 65, III	
Insulation resistance [MΩ]	> 100 (500 V DC)	
Shock resistance	DIN IEC 68-2-27:50 g (11 ms)	
Vibration resistance	DIN IEC 68-2-6:20 g (10...2000 Hz)	
Min. pressure cycles	100 million	
EMC	EN 61000-4-2 ESD:	4 kV CD / 8 kV AD
	EN 61000-4-3 HF radiated:	30 V/m
	EN 61000-4-4 Burst:	2 kV
	EN 61000-4-6 HF conducted:	10 V
	radiation of interference	according to the automotive directive 2004/104/EC / CISPR25
	noise immunity	according to the automotive directive 2004/104/EC / ISO 11452-2
	HF radiated	100 V/m
	pulse resistance	according to ISO7637-2 / severity level 3
Housing material	stainless steel (316S12); FPM (Viton); PA; EPDM/X (Santoprene)	
Materials (wetted parts)	stainless steel (303S22); ceramics; FPM (Viton)	
Connection	M12 connector	
Remarks	The device shall be supplied from an isolating source and protected by an overcurrent device such that the limited voltage circuit requirements in accordance with UL 508 are met. *) incl. linearity, zero and span error (limit value setting) **) with temperature fluctuations < 10 K ***) in % of value of measuring range / 6 months	

Wiring

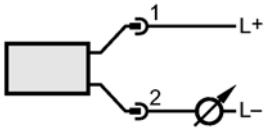

PN2294

Pressure sensor with display

PN-010-REN14-MFRKG/US/ /V

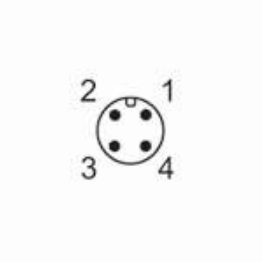

Connection

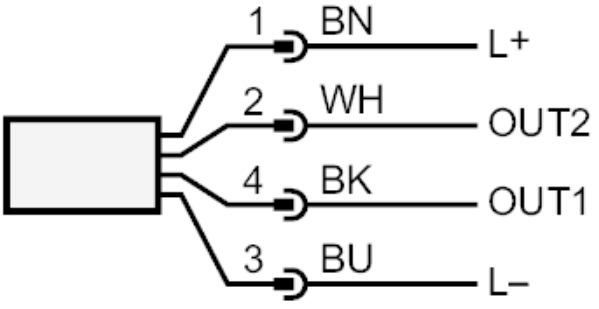

OUT1	switching output
OUT2	switching output
	analogue output
	Core colours :
BK =	black
BN =	brown
BU =	blue
WH =	white

LIQUID FILLED GAUGES

Section 3.2
Pressure Gauges

STAINLESS CASE

- Liquid Filled Gauges with a stainless case are used for protection in harsh environments.
- Stainless Steel Case
- Copper Alloy Wetted parts
- Polycarbonate window
- ± 1.5% of span accuracy
- Temp. Range -104°F to 158°F

Liquid filled gauges enhance the reliability and integrity of the measuring system for long periods. The glycerine filling helps dampen the effects of vibration and pulsation. It also lubricates the movement which extends the life of the gauge.

1-1/2" FACE 1/8" LOWER MOUNT

Part #	PSI
80-601	0-15
80-602	0-30
80-603	0-60
80-604	0-100
80-605	0-160
80-606	0-200

2-1/2" FACE 1/4" LOWER MOUNT

Part #	PSI
80-061	0-15
80-062	0-30
80-063	0-60
80-064	0-100
80-065	0-160
80-066	0-200
80-067	0-300
80-068	0-400
80-069	0-600
80-100	0-1000
80-101	0-1500
80-102	0-2000
80-103	0-3000
80-104	0-5000
80-105	0-10000
80-080	30-0 Vacuum
80-081	-30 to +30

4" FACE 1/4" LOWER MOUNT

Part #	PSI
80-463	0-100

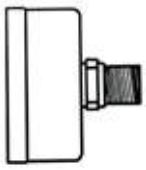

CENTER BACK MOUNT

1-1/2" FACE 1/8" CENTER BACK MOUNT

Part #	PSI
80-611	0-15
80-612	0-30
80-613	0-60
80-614	0-160
80-615	0-100
80-616	0-200

2-1/2" FACE 1/4" CENTER BACK MOUNT

Part #	PSI
80-201	0-15
80-202	0-30
80-204	0-60
80-203	0-160
80-205	0-100
80-206	0-200
80-207	0-300
80-208	0-400
80-209	0-600

efector160

Section 3.3
Wet Switch
Optional with Primer Pumps

LMC502

LMCCE-N12E-QSKG-2/US

Level sensors

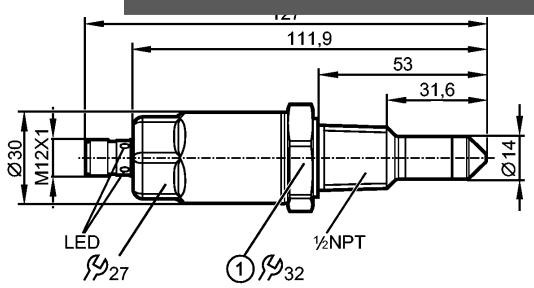

1: tightening torque 50 Nm

CE cULus LISTED IO-Link

Product characteristics

Electronic level sensor

Quick disconnect

Process connection: ½" NPT

gold-plated contacts

Probe length: 38 mm

2 switching outputs

Application

Application		liquid, viscous and powdery media
Recommended media		water, water-based media, oils, oil-based media, powdery media
Cannot be used for:		See the operating instructions, chapter "Function and features".
Medium temperature oil		
- Continuous	[°C]	-20...100
- Short time	[°C]	-20...150 (1 h)
Medium temperature water and hydrous media		
- Continuous	[°C]	-20...85
- Short time	[°C]	-20...150 (1 h)

Electrical data

Electrical design		DC PNP/NPN
Operating voltage	[V]	18...30 DC
Current consumption	[mA]	< 50
Protection class		III
Reverse polarity protection		yes

Outputs

Output		2 switching outputs
Output function		2 x normally open / closed programmable
Current rating	[mA]	100
Voltage drop	[V]	< 2.5
Short-circuit protection		yes (non-latching)
Overload protection		yes

Interfaces

IO-Link Device

Transfer type	COM2 (38.4 kBaud)
IO-Link revision	1.1
SDCI standard	IEC 61131-9 FDIS

LMC502

LMCCE-N12E-QSKG-2/US

IO-Link Device ID		370 d / 00 01 72 h
Profiles		Smart Sensor: Process Data Variable; Device Identification
SIO mode		yes
Required master port class		A
Process data analogue		1
Process data binary		2
Min. process cycle time	[ms]	2.3
Environment		
Ambient temperature	[°C]	-20...85, at max. 100 °C medium temperature (-20...60 °C at max. 150 °C medium temperature)
Storage temperature	[°C]	-40...85
Maximum vessel pressure	[bar]	-1...40
Protection		IP 68 / IP 69K
Tests / approvals		
EMC		DIN EN 61000-6-2 DIN EN 61000-6-4 / (open tanks) DIN EN 61000-6-3 / (closed tanks)
Shock resistance		DIN EN 60068-2-27 50 g (11 ms)
Vibration resistance		DIN EN 60068-2-6 20 g (10...2000 Hz)
MTTF	[Years]	223
Mechanical data		
Process connection		½" NPT
Materials (wetted parts)		PEEK; surface characteristics: Ra < 0.8
Housing materials		316L stainless steel / 1.4404; PEEK; PEI; FKM
Weight	[kg]	0.258
Displays / operating elements		
Display		Switching status 2 LED yellow operating status 2 LED green
Electrical connection		
Connection		M12 connector; gold-plated contacts

Wiring

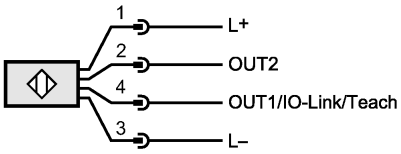

Remarks		
Pack quantity	[piece]	1

efector300®
Flow monitors

SC0501

Compact type
½"NPT
Quick disconnect
Preset switch point

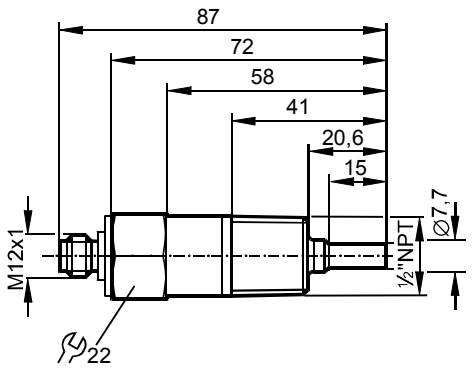

Application		**water**
Electrical design		**AC / DC**
Output		**normally open**
Operating voltage	[V]	24 AC / DC ± 15% (AC: 47...63 Hz) [1])
Current rating	[mA]	80 AC / DC
Short-circuit protection		—
Reverse polarity protection / overload protection		—
Voltage drop	[V]	< 4
Current consumption	[mA]	< 60
Pressure rating	[bar]	21
Medium temperature	[°C]	-10...+60
Adjustment of the switch point		preset switch point (15 cm/s)
Power-on delay time	[s]	15
Response time	[s]	< 10 (0...100 cm/s)
Operating temperature	[°C]	-20...+70
Protection		IP 67, III
Housing material		stainless steel (303S22)
Material sensor surface		stainless steel (303S22)
Connection		M12 connector

Wiring

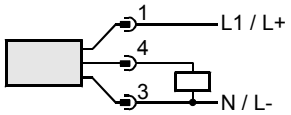

Remarks

[1]) to EN50178, SELV, PELV;
referring to UL: “limited voltage” with overcurrent protection in accordance with UL508
All data refer to water (25°C) and mounting in 4" pipe.
Storage temperature: -40...+70°C

Badger® Series 200	Insertion Flow Sensor	Brief

The Badger Meter Series 200 flow sensors feature a six bladed impeller design with a proprietary non-magnetic sensing mechanism. The forward swept impeller shape provides higher, more consistent torque and is less prone to be fouled by water borne debris. The forward curved shape coupled with the absence of magnetic drag provides improved operation and repeatability even at lower flow rates. This is especially true where the impeller is exposed to metallic or rust particles found in steel or iron pipes. As the liquid flow turns the impeller, a low impedance square wave signal is transmitted with a frequency proportional to the flow rate. The signal can travel up to 2000 feet between the flow sensor and the display unit without the need for amplification. All sensors except irrigation versions are supplied with 20 feet of Belden type 9320 two conductor shielded cable.

MODEL 220BR (BRASS) AND 220SS (STAINLESS STEEL) SENSOR

The Badger® Model 220BR and 220SS sensors are used in most general flow measuring applications in metallic or non-metallic pipes. The sensor mounts in a 2" NPT pipe saddle or Threadolet® for installation in pipe sizes from 3" to over 40". Positioning nuts on the three threaded retaining rods allow the sensor to be accurately positioned to a standard insertion depth of 1½" into the pipe. When this insertion depth is maintained, and there is at least 10 upstream and 5 downstream diameters of straight uninterrupted flow, an accuracy of +/-1% of full scale can be obtained from flow velocities of 0.5 to 30 feet/second (± 4.0% of reading within calibration range).

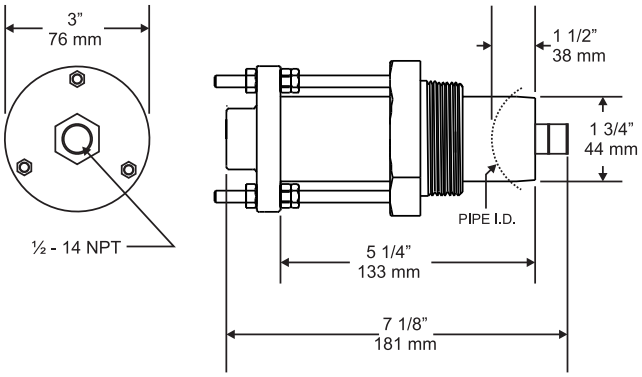

Dimensions Model 220BR, 220SS

Model 220BR (Brass) & 220SS (Stainless Steel) Sensor

Model 220PVS

MODEL 220PVS

The Badger Meter 220PVS flow sensor is an insertion style flow sensor will all wetted parts constructed of non-metallic materials. These sensors are designed for service in corrosive liquids. The metallic trim, in non-wetted areas, is 316 stainless steel. The sensor mounts in a 2" NPT thread and may be attached to the pipe with a saddle or other types of mounting hardware.

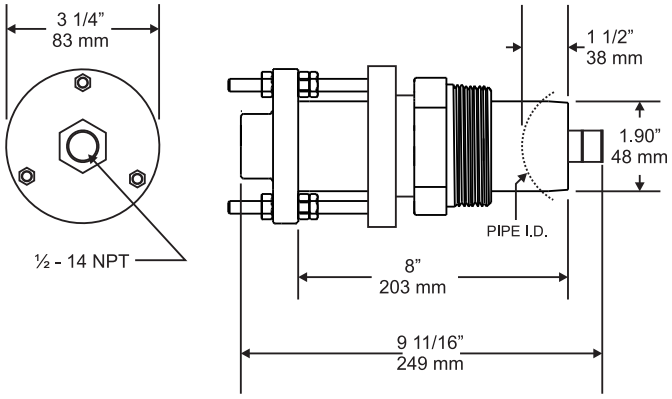

Dimensions Model 220PVS

FM APPROVED

Exia

SPECIFICATIONS

Wetted Materials for all sensors
- (see ordering matrix)

Sensor Sleeve and Hex Adapter for 220BR
- Sleeve: Admiralty Brass, UNS C44300;
  Hex Adapter: Valve Bronze, UNS C83600

Sensor Sleeve and Hex Adapter for 220SS
- 316 Series Stainless Steel

Temperature Ratings
- Standard Version:
  221°F (105°C) continuous service
- Irrigation Version:
  150°F (66°C) continuous service
- PVC Version:
  140°F (60°C) continuous service

Pressure Ratings

Metallic Sensor	At 100°F
220BR	400 psi
220SS	400 psi

Plastic Sensor	At 100°F
220PVS	100 psi

Recommended Design Flow Range
- 0.5 to 30 ft/sec
- Initial detection below 0.3 ft/sec

Accuracy
- ± 1.0% of full scale over recommended design flow range
- ± 4.0% of reading within calibration range

Repeatability
- ± 0.3% of full scale over recommended design flow range

Linearity
- ± 0.2% of full scale over recommended design flow range

Transducer Excitation
- Quiescent current 600uA@8VDC to 35VDC max.
- Quiescent voltage (V_{high})
  Supply Voltage -(600uA*Supply impedance)
- ON State (V_{Low}) Max. 1.2VDC@40mA current limit (15W+0.7VDC)

Output Frequency
- 3.2 Hz to 200 Hz

Output Pulse Width
- 5 msec ±25%

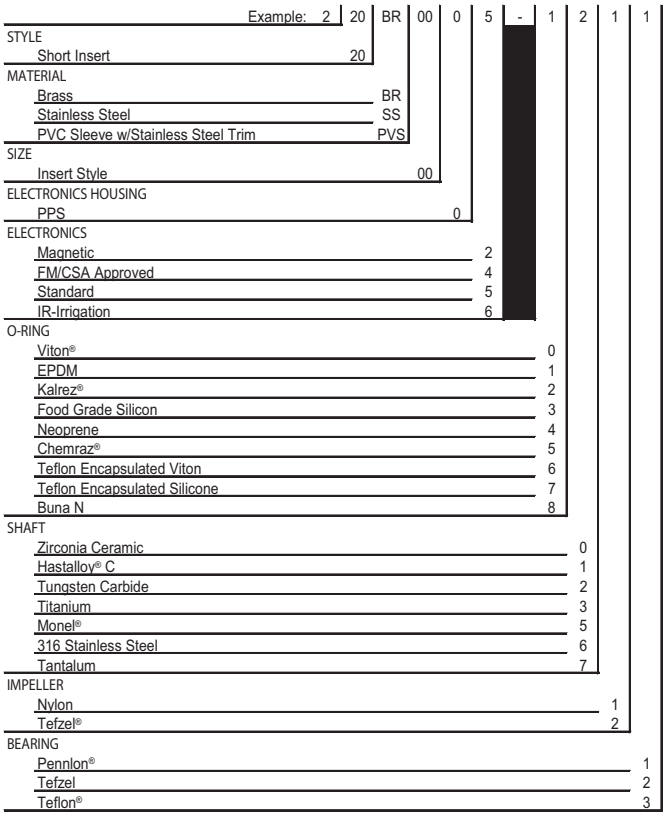

Series 200 Insert Style Matrix (sizes 3" and up)

Electrical Cable for Standard Sensor Electronics
- 20 feet of 2-conductor AWG 20 with AWG 22 drain wire shielded U.L. type PTLC wire provided for connection to display or transmitter unit. Rated to 105°C. May be extended to a maximum of 2000 feet with similar cable and insulation appropriate for application.

Electrical Cable for IR Sensor Electronics
- 48 inches of U.L. Style 116666 copper solid AWG 18 wire w/ direct burial insulation. Rated to 105°C.

Badger® and Data Industrial® is a registered trademark of Badger Meter, Inc.
Chemraz® is a registered trademark of Greene Tweed of Delaware, Inc.
Pennlon® is a registered trademark of Dixon Corporation.
Hastalloy® is a registered trademark of The Haynes Stellite Company.
Monel® is a registered trademark of Inco Alloys International, Inc.
Kalrez®, Viton®, Teflon®, and Tefzel® are a registered trademarks of E.I. DuPont de Nemours and Company.
Threadolet® is a registered trademark of Bonney Forge & Tool Works Corporation.

Due to continuous research, product improvements and enhancements, Badger Meter reserves the right to change product or system specifications without notice, except to the extent an outstanding contractual obligation exists.

Data Industrial®

Please see our website at **www.badgermeter.com** for specific contacts.

Copyright © Badger Meter, Inc. 2009. All rights reserved.

BadgerMeter, Inc.
P.O. Box 581390, Tulsa, Oklahoma 74158
(918) 836-8411 / Fax: (918) 832-9962
www.badgermeter.com

4 Pump & Motor Data

Section 4.1 Main Pump & Motor

Customer	Date 03.02.2020
Contact	Project
Phone number	Project no.
Email	

Technical Data

7BF1MBE0

Operating data

Pump type			Fluid		Water
No. of pumps / Reserve		1 / 0	Operating temperature t A	°F	39.2
Nominal flow	US g.p.m.	200	pH-value at t A		7
Nominal head	ft	150	Density at t A	lb/ft³	62.4
Static head	ft	0	Kin. viscosity at t A	ft²/s	1.689E-5
Inlet pressure	psi	0	Vapor pressure at t A	psi	14.5
Environmental temperature	°F	68	Solids		0
Available system NPSH	ft	0	Altitude	ft	0

Pump data

Make	Goulds Water Technology				Nominal	US g.p.m.	200	(200)
Speed		rpm	3600	Flow	Max-	US g.p.m.	366.4	
No. of stages			1		Min-	US g.p.m.		
Max. casing pressure		psi			Nominal	ft	150	
Max. working pressure		psi	68.5	Head	at Qmax	ft	104.3	
Head H(Q=0)		ft	160		at Qmin	ft	157.9	
Weight		lb	195	Shaft power		hp	11	(11)
	Max.	inch	7 15/16	Max. shaft power		hp	15.4	
Impeller R	designed	inch	6 3/8	Efficiency		%	67.98	
	Min.	inch	6 3/16	NPSH 3%		ft	7	

Shaft Seal

Type 21	Xylem
Car/Cer/Buna (Std.) [Max Temp. 212°F/100°C]	
Rotary	Carbon
Stationary	Ceramic
Elastomers	Buna-N
Metal Parts	316 SS
Application	General Use, Clean Water to 212°F/100°C, Non-Fluctuating Temp

Motor data

Specific design	3ph ODPE	Speed	3500 rpm	Insulation class	F
Electric voltage	230 V	Frame size	215JM	Colour	RAL 5010
Type	230/460V 215JM (C13A32F4BE2S)	Degree of protection	IP 55		
Rated power	15 hp	Electric current	35 A		

Remarks:

Customer	Date 03.02.2020
Contact	Project
Phone number	Project no.
Email	

7BF1MBE0

Construction Data

Pump Materials

100 - Casing	Gray cast iron ASTM A48 CL20B
101 - Impeller	Silicon bronze ASTM B584, C87500
103 - Casing wear ring	Bizmuth brass
108 - Adapter	Cast iron ASTM A48 CL30
178 - Impeller key	Carbon Steel
184 - Seal housing (One piece with adapter)	Cast iron ASTM A48 CL30
198 - Impeller bolt	AISI Type 300 series stainless steel
199 - Impeller washer	AISI Type 300 series stainless steel
370 - Hex head cap screw (adapter to case)	Steel SAE 1200 Grade 5
371 - Hex head cap screw (adapter to motor)	Steel SAE 1200 Grade 5
383 - Mechanical seal	See seal chart
408 - Pipe plug 1/4" or 3/8"	Steel
513 - O-ring	BUNA-N

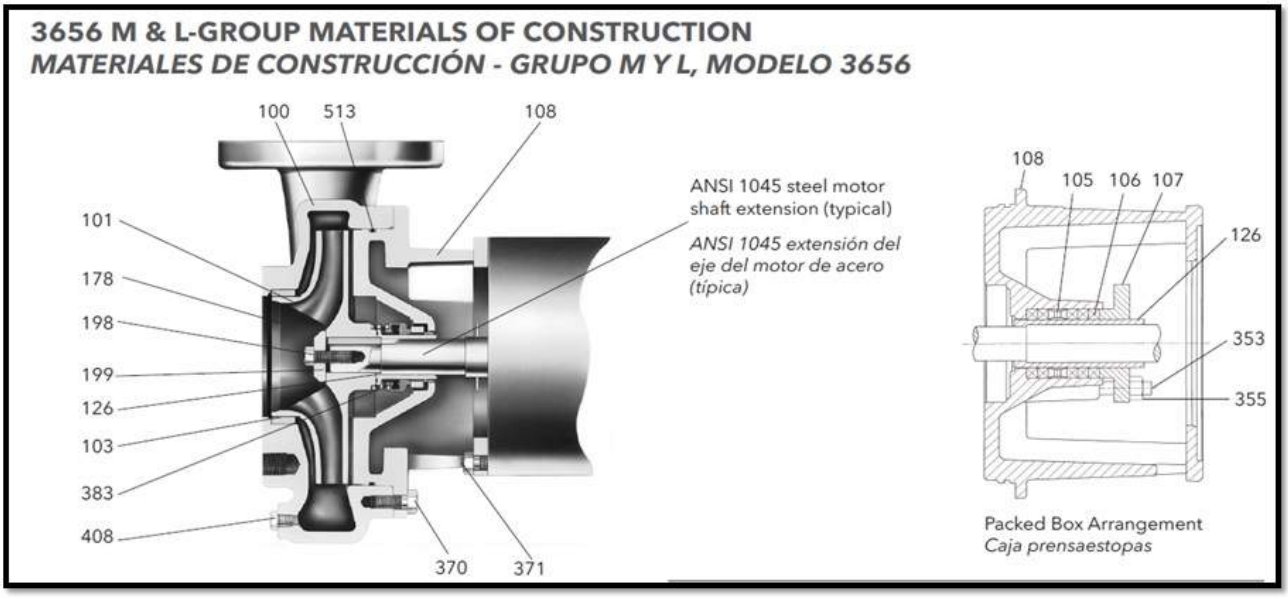

Remarks:

GOULDS WATER TECHNOLOGY
a xylem brand

Customer		Date	03.02.2020
Contact		Project	
Phone number		Project no.	
Email			

Tender Hydraulic

7BF1MBE0

Hydraulic Data

Operating Data Specification		Hydraulic data (duty point)		Impeller design	
Flow	200 US g.p.m.			Impeller R	6 3/8"
Head	150 ft	Flow	200 US g.p.m.	Frequency	60 Hz
Static head	0 ft	Head	150 ft	Speed	3600 rpm

Power datas referced to:
Water [100%] ; 39.2°F; 62.4lb/ft³; 1.69E-5ft²/s
Performance according to ISO 9906 - Annex A

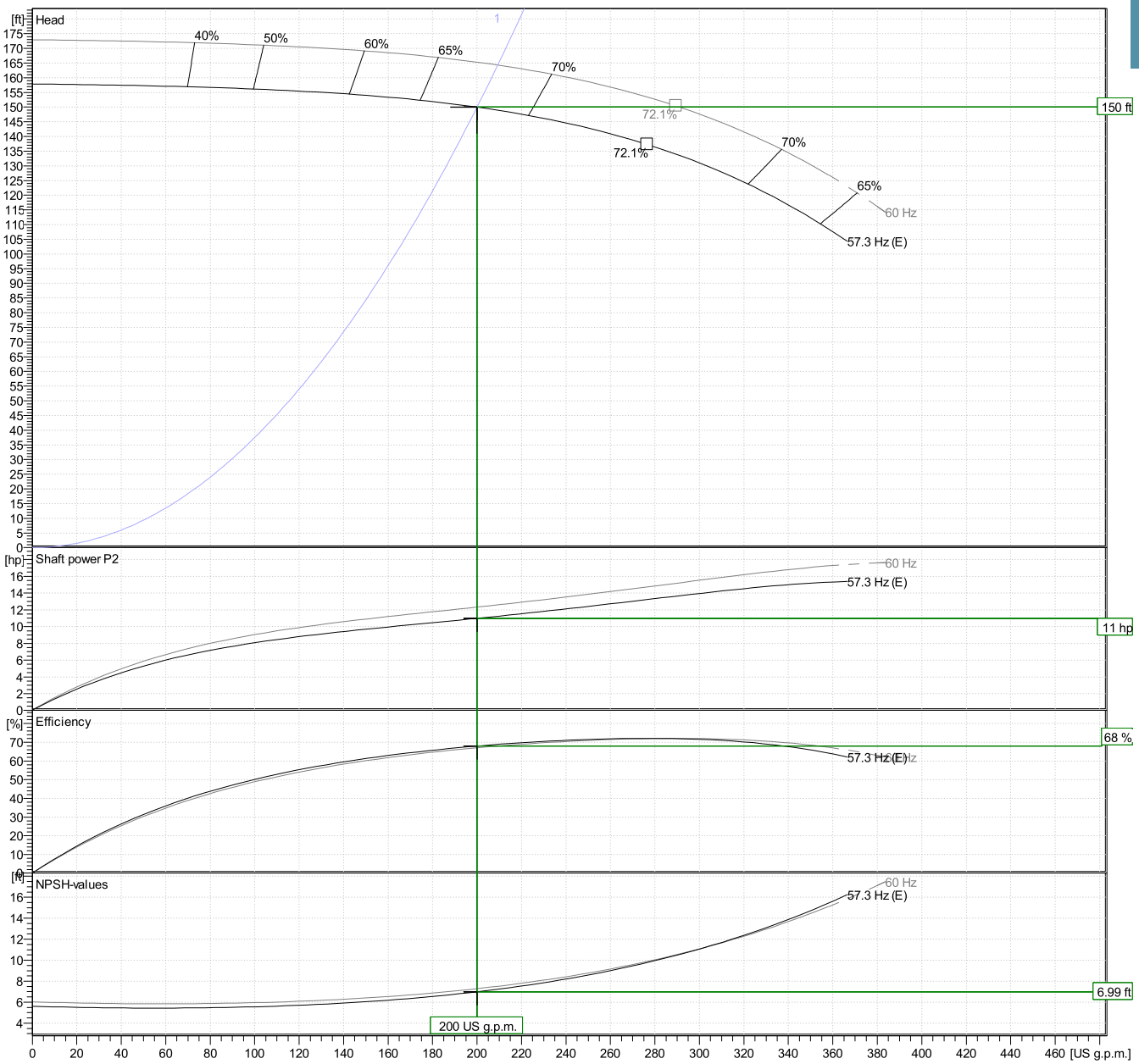

Customer Contact Phone number Email	Date 03.02.2020 Project Project no.

7BF1MBE0

Drawing

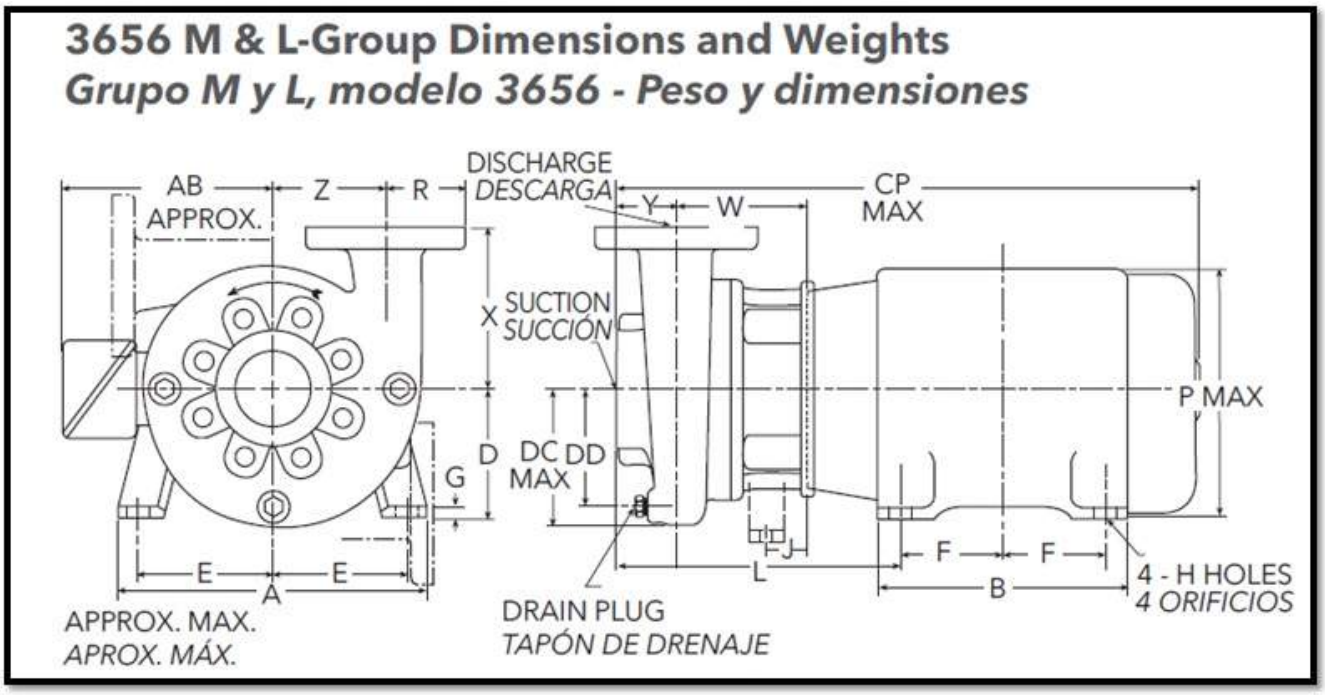

Dimensions inch

A	$9^{3}/_{4}$	H	$^{7}/_{16}$	Z	5	Weight
AB Max.	$9^{5}/_{8}$	L	13			195 lb
B	$9^{9}/_{16}$	NPT Drain	$1^{1}/_{4}$			
D	$5^{1}/_{4}$	P Max.	$11^{1}/_{4}$			
DD	$5^{1}/_{4}$	R	$1^{13}/_{16}$			
Discharge	$2^{1}/_{2}$	Suction	3			
E	$4^{1}/_{4}$	W	$5^{1}/_{8}$			
F	$3^{1}/_{2}$	X	6			
G	$^{5}/_{8}$	Y	$3^{3}/_{8}$			

Section 4.2 Jockey Pump & Motor

Customer	Date 03.02.2020
Contact	Project
Phone number	Project no.
Email	

Technical Data

9BF1JBE (1)0

Operating data

Pump type				Fluid		Water
No. of pumps / Reserve			1 / 0	Operating temperature t A	°F	39.2
Nominal flow	US g.p.m.		60.01	pH-value at t A		7
Nominal head		ft	150	Density at t A	lb/ft³	62.4
Static head		ft	0	Kin. viscosity at t A	ft²/s	1.689E-5
Inlet pressure		psi	0	Vapor pressure at t A	psi	14.5
Environmental temperature		°F	68	Solids		0
Available system NPSH		ft	0	Altitude	ft	0

Pump data

Make	Goulds Water Technology				Nominal	US g.p.m.	60	(60)
Speed		rpm	3600	Flow	Max-	US g.p.m.	83.7	
No. of stages			1		Min-	US g.p.m.		
Max. casing pressure		psi			Nominal	ft	150	
Max. working pressure		psi	73.7	Head	at Qmax	ft	127.3	
Head H(Q=0)		ft	170		at Qmin	ft	169.9	
Weight		lb	114	Shaft power		hp	4.6	(4.6)
	Max.	inch	8 1/16	Max. shaft power		hp	5.4	
Impeller R	designed	inch	6 1/2	Efficiency		%	48.62	
	Min.	inch	5 1/8	NPSH 3%		ft	4.5	

Shaft Seal

Type 21	Xylem
(10K13) Car/Cer/Buna [Max Temp. 212°F/100°C] (Std.)	
Rotary	Carbon
Stationary	Ceramic
Elastomers	Buna-N
Metal Parts	316 SS
Application	General Use, Clean Water to 212°F/100°C, Non-Fluctuating Temp

Motor data

Specific design	3ph ODPE	Speed	3500 rpm	Insulation class	F
Electric voltage	230 V	Frame size	182JM	Colour	RAL 5010
Type	230/460V 182JM (C10A32F4BD2S)	Degree of protection	IP 55		
Rated power	5 hp	Electric current	12 A		

Remarks:

GOULDS WATER TECHNOLOGY
a xylem brand

Customer	Date 03.02.2020
Contact	Project
Phone number	Project no.
Email	

9BF1JBE (1)0

Construction Data

Pump Materials

100 - Casing	Gray cast iron ASTM A48 CL20B
101 - Impeller	Silicon bronze ASTM B584, C87500
103 - Casing wear ring	Bizmuth brass
108 - Adapter	Cast iron ASTM A48 CL30
184 - Seal housing (One piece with adapter)	Cast iron ASTM A48 CL30
198 - Impeller bolt	AISI Type 300 series stainless steel
199 - Impeller washer	AISI Type 300 series stainless steel
178 - Impeller key	Carbon Steel
370 - Hex head cap screw (adapter to case)	Steel SAE 1200 Grade 5
371 - Hex head cap screw (adapter to motor)	Steel SAE 1200 Grade 5
383 - Mechanical seal	See seal chart
408 - Pipe plug 1/4" or 3/8"	Steel
513 - O-ring	BUNA-N

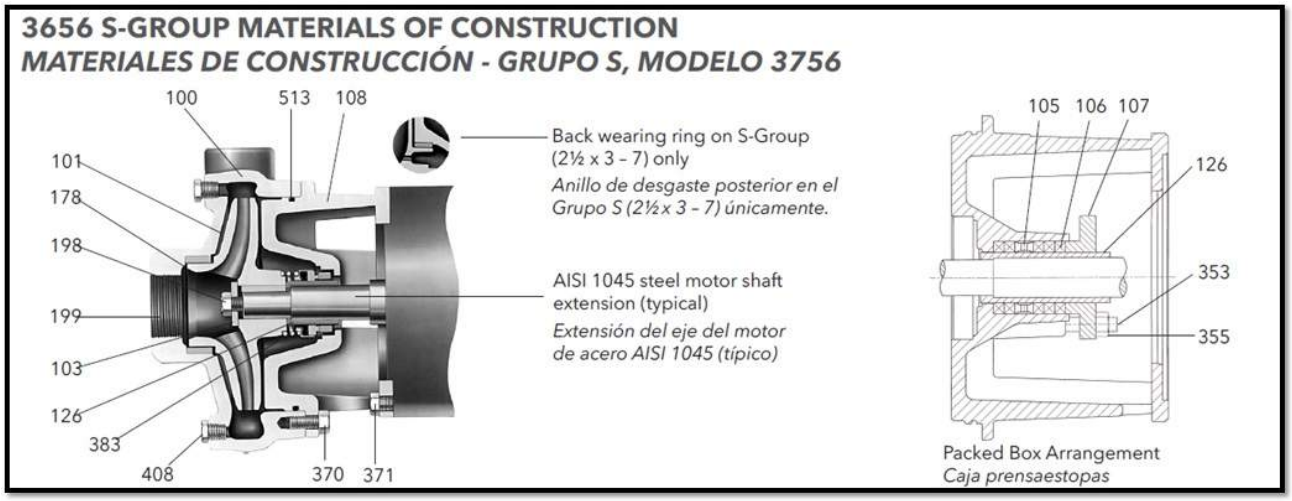

Remarks:

GOULDS WATER TECHNOLOGY
a xylem brand

Customer		Date	03.02.2020
Contact		Project	
Phone number		Project no.	
Email			

9BF1JBE (1)0

Tender Hydraulic

Hydraulic Data

Operating Data Specification		Hydraulic data (duty point)		Impeller design	
Flow	60 US g.p.m.			Impeller R	6 1/2"
Head	150 ft	Flow	60 US g.p.m.	Frequency	60 Hz
Static head	0 ft	Head	150 ft	Speed	3600 rpm

Power datas referced to:
Water [100%] ; 39.2°F; 62.4lb/ft³; 1.69E-5ft²/s
Performance according to ISO 9906 - Annex A

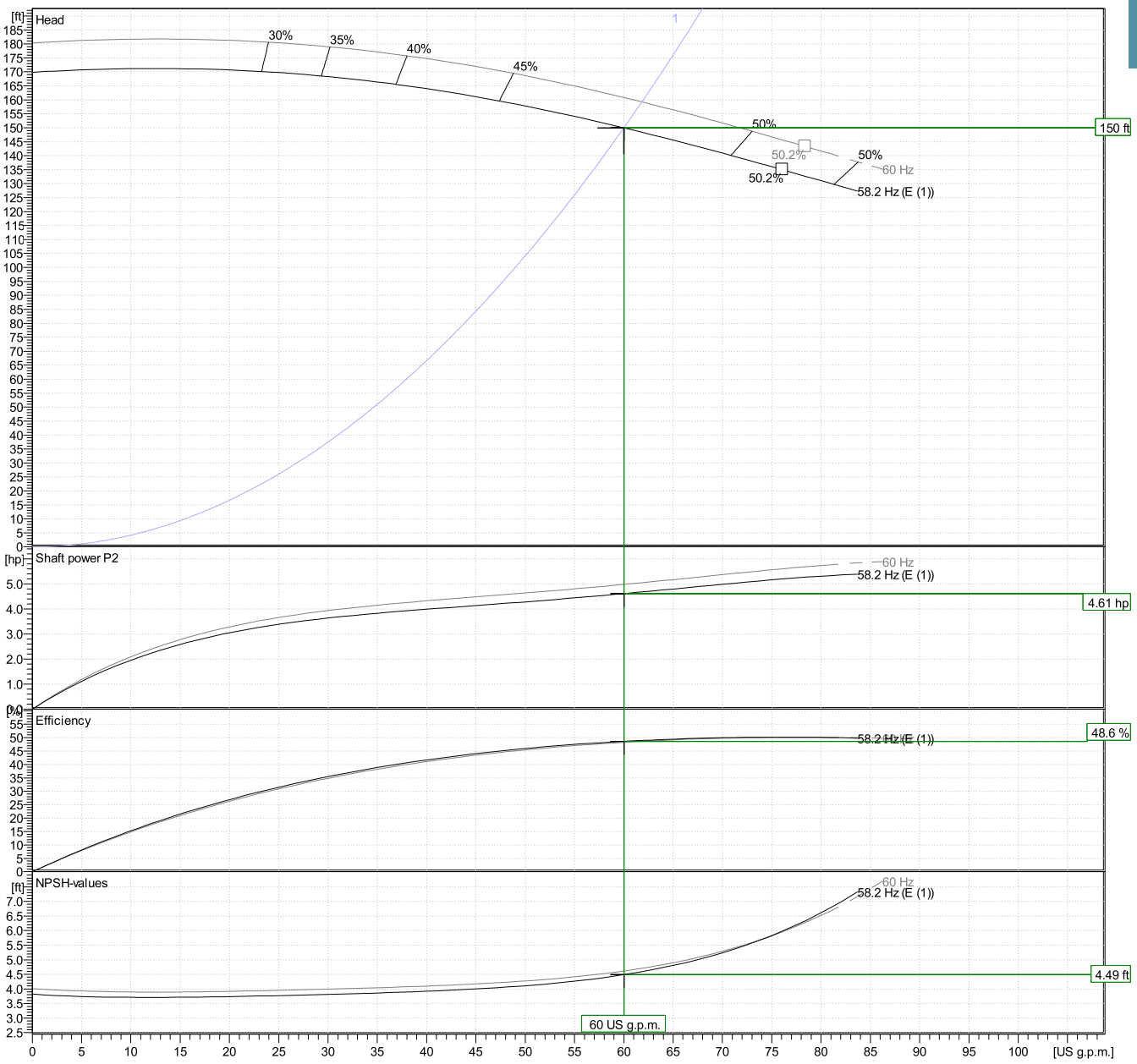

Customer Contact Phone number Email	Date 03.02.2020 Project Project no.

9BF1JBE (1)0

Drawing

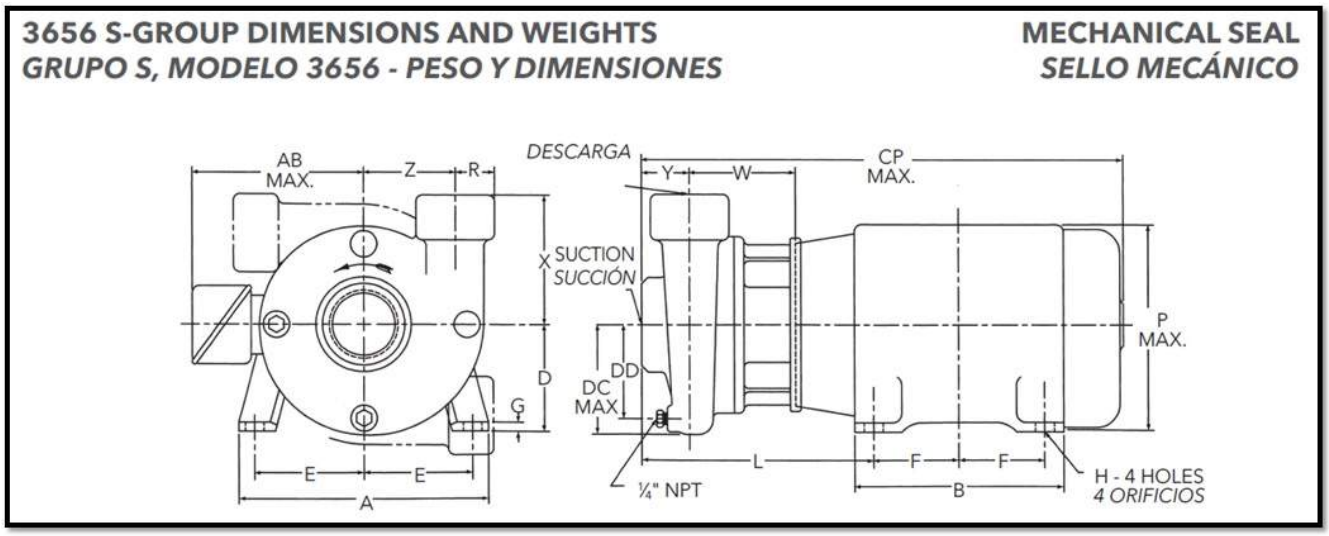

Dimensions inch

A	$8^{11}/_{16}$	F	$2^{1}/_{4}$	Y	$3^{3}/_{16}$	Weight
AB Max.	$7^{1}/_{2}$	G	$^{3}/_{8}$	Z	$4^{1}/_{4}$	114 lb
B	$6^{1}/_{2}$	H	$^{7}/_{16}$			
CP Max.	$24^{3}/_{4}$	L	$10^{5}/_{8}$			
D	$4^{1}/_{2}$	P Max.	$9^{9}/_{16}$			
DC Max.	$4^{1}/_{4}$	R	$1^{1}/_{16}$			
DD	4	Suction	2			
Discharge	1	W	$3^{15}/_{16}$			
E	$3^{3}/_{4}$	X	$5^{3}/_{4}$			

5 Valves

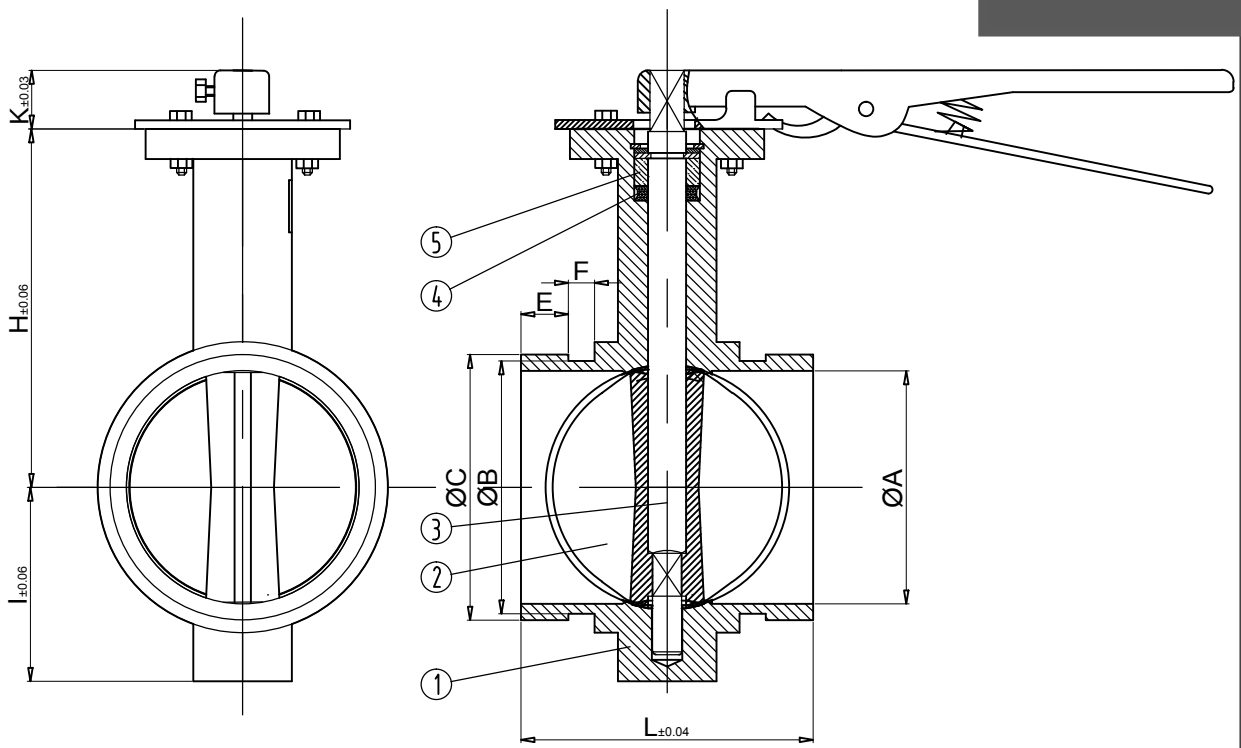

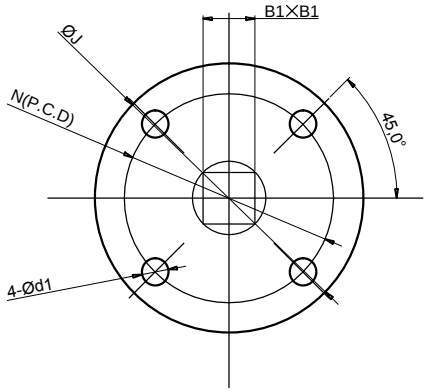

5	BUSHING	PTFE
4	X-RING	NBR
3	STEM	SS410
2	DISC	DI+NBR
1	BODY	DI
NO.	PARTS NAME	MATERIAL

TEST PRESSURE		SHELL	SEAL
	HYDROSTATIC	225 PSI	165 PSI
	AIR		
STAND-ARD	DESIGN CODE	ANSI 150#	

Unit: inch

SIZE	A	B	C	E	F	H	I	K	L	B1XB1	J	N	4-0d1
2	1.97	2.25	2.37	0.63	0.31	4.69	2.48	1.18	3.24	0.43	3.54	2.76	0.39
2.5	2.40	2.72	2.87	0.63	0.31	4.92	2.70	1.18	3.81	0.43	3.54	2.76	0.39
3	3.07	3.34	3.50	0.63	0.31	5.18	3.15	1.18	3.81	0.43	3.54	2.76	0.39
4	3.98	4.33	4.50	0.63	0.38	5.94	3.70	1.18	4.56	0.43	3.54	2.76	0.39
5	5.00	5.39	5.56	0.63	0.38	6.75	4.25	1.18	5.81	0.55	3.54	2.76	0.39
6	5.91	6.46	6.63	0.63	0.38	7.20	4.84	1.18	5.81	0.55	3.54	2.76	0.39
8	7.95	8.44	8.63	0.75	0.44	8.09	5.88	1.57	6.25	0.67	4.92	4.02	0.47
10	9.96	10.56	10.75	0.75	0.50	9.84	7.32	1.57	6.25	0.87	4.92	4.02	0.47
12	11.96	12.53	12.75	0.75	0.50	10.83	8.39	1.57	6.44	0.87	4.92	4.02	0.47

Drawing Title: BFV-B-GVNL-(SIZE)-	INDUSTRIAL CHOICE	Phone # 541.564.7636	Date: 07/27/2015
		Fax # 541.564.6522	Drafted By: AB

Bulletin 8000

VAL-MATIC®

DUAL DISC® CHECK VALVE

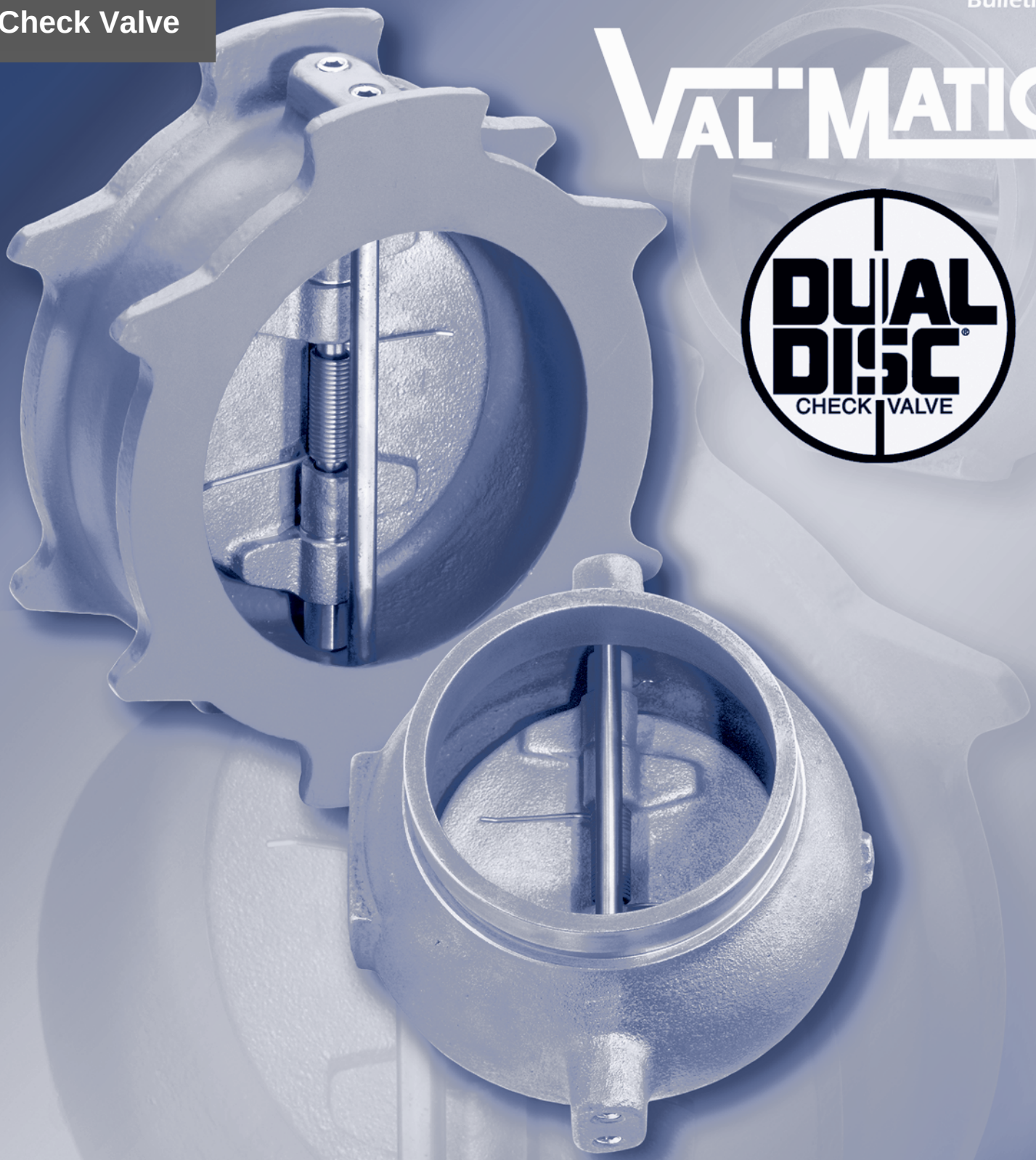

Cost Efficient and Reliable.... Right From the Start

Maximum Pressure-Termperature Ratings

Maximum Non-Shock Working Pressure PSIG (BAR) ANSI Class 125, ISO PN 10 - 16

Temp.	Ductile Iron	Cast Iron		Temp.	Ductile Iron	Cast Iron	
F	2" - 12"	14" - 24"	30" - 60"	C	50 - 300mm	350 - 600mm	750 - 1500mm
150	250	150	150	65	17.2	10.3	10.3
200	235	135	115	95	16.2	9.3	7.9
250	220	125	85	120	15.2	8.6	5.9
Hydro Test	500	230	230	Hydro Test	35	16	16

Materials of Construction

Component			Standard	Optional
Body	2" - 12"	50 - 300mm	Ductile Iron ASTM A536 Gr. 65-45-12	N/A
	14" - 60"	350 - 1,500mm	Cast Iron ASTM A126, Class B	Ductile Iron ASTM A536 Gr. 65-45-12
Disc	2" - 12"	50 - 300mm	Bronze ASTM B584, C83600	N/A
	14" - 60"	350 - 1,500mm	Aluminum Bronze ASTM B148, Alloy C95200	Ductile Iron, Electroless Nickel Plated
Seal			Buna-N (NBR)	Viton (FKM)
Spring			316 SS (2"-16"/50-400mm), 17-7 PH (18"- 60"/450-1,500mm)	N/A
Trim			316 Stainless Steel	N/A
Exterior Coating			Universal Primer	ANSI/NSF 61 Fusion Bonded Epoxy*

*FBE also available on interior.

FLOW COEFFICIENTS

	IN	2"	2.5"	3"	4"	5"	6"	8"	10"	12"
Series 8800W	*Cv	76	161	224	400	648	1,060	1,890	3,340	5,270
	MM	50	65	80	100	125	150	200	250	300
	**Kv	65	137	191	341	553	904	1,612	2,850	4,495
Series 8800G	IN	2"	2.5"	3"	4"	5"	6"	8"	10"	12"
	*Cv	77	129	209	358	573	898	1,740	3,180	4,950
	MM	50	65	80	100	125	150	200	250	300
	**Kv	66	110	178	305	489	766	1,484	2,712	4,222

Series 8800

Size IN	Size MM	*Cv	**Kv	Size IN	Size MM	*CV	**Kv
14	350	5,200	4,435	36	900	50,000	42,650
16	400	7,200	8,018	42	1,100	72,000	61,400
18	450	9,400	10,240	48	1,200	97,000	82,740
20	500	12,000	15,780	54	1,144	130,000	112,400
24	600	18,500	28,150	60	1,500	180,000	155,700
30	800	33,000	42,650				

*Cv = The number of U.S. gallons/minute of 60° F water that will flow through the valve with a 1 PSI pressure drop across the valve.
**Kv = The number of cubic meters per hour of 20° C water that will flow through a valev with a 1 bar pressure drop across the valve.

HEAD LOSS CHART

FLOW OF WATER IN METERS PER HOUR

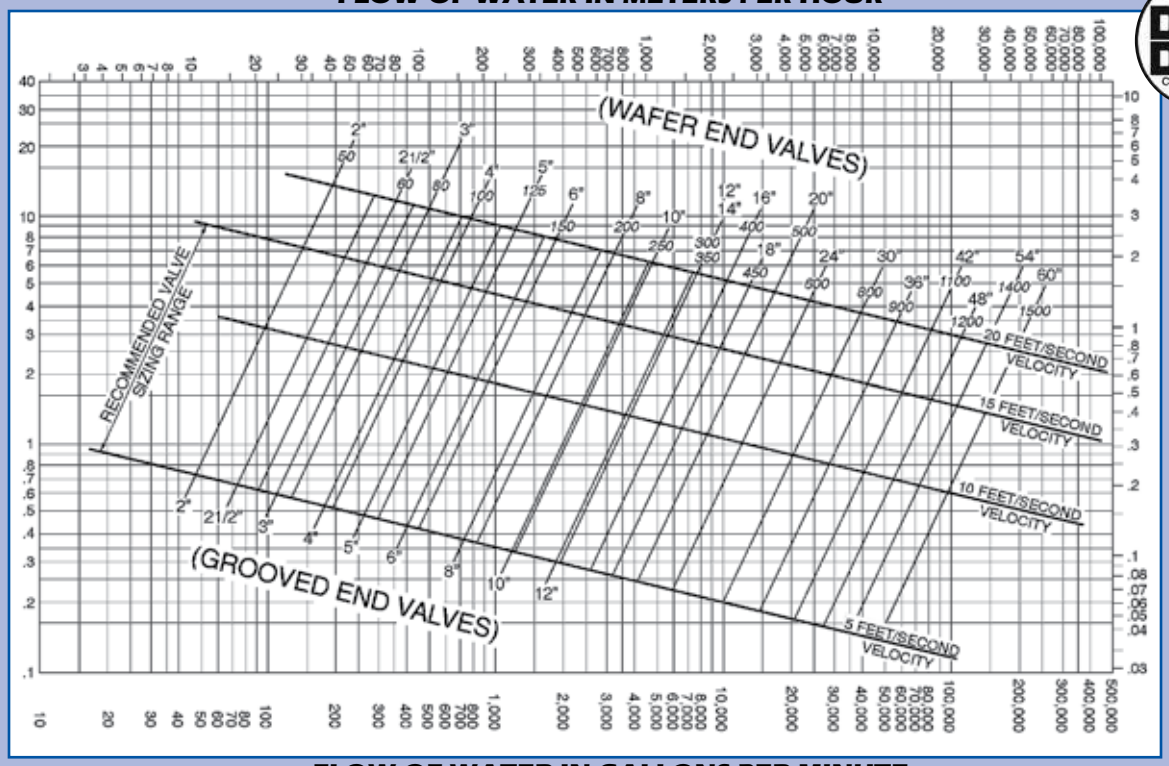

FLOW OF WATER IN GALLONS PER MINUTE

INSTALLATION DIMENSIONS

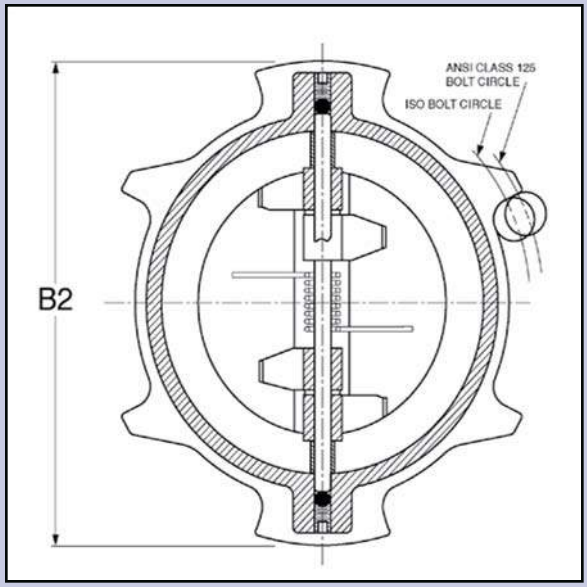

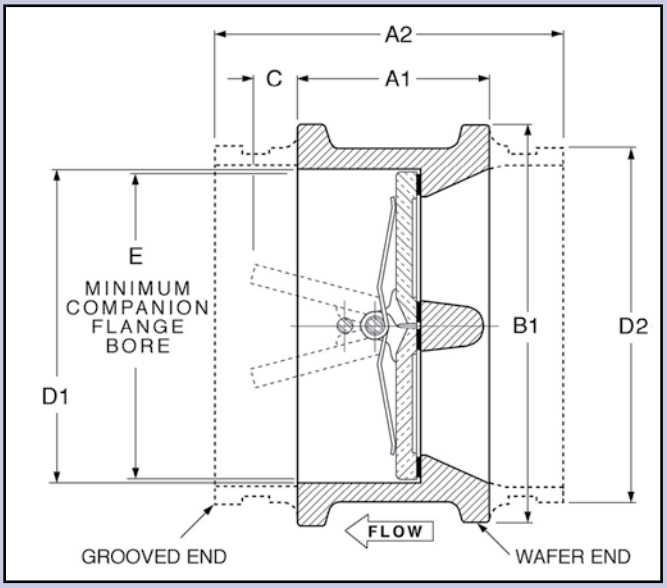

FM APPROVED

2.5" - 16"
65 - 400mm

c UL US

2.5" - 12"
65 - 300mm

Valve Size	A1	A2	B1	B2	C	D1	D2	E	Wafer Wt. Lbs. (KG)	Grooved Wt. Lbs. (KG)
2" 50 mm	2.13 54.0	4.66 118.3	4.13 104.8	5.13 130.2	.19 4.8	2.56 65.1	2.38 60.3	1.94 49.2	4 1.8	4 1.8
2.5" 65 mm	2.38 60.3	4.91 124.6	4.88 123.8	5 142.9	.31 7.9	3.06 77.8	2.88 73.0	2.31 58.7	5 2.3	5 2.3
3" 80 mm	2.63 66.7	5.31 134.9	5.38 136.5	6 136.5	.5 12.7	3.69 93.7	3.5 88.9	2.88 73.0	7 3.2	8 3.6
4" 100 mm	2.63 66.7	5.38 136.5	6.88 174.6	7.75 196.9	1 25.4	4.63 117.5	4.5 114.3	3.88 98.4	9 4.1	9 4.1
5" 125 mm	3.25 82.6	5.72 145.3	7.75 196.9	7.56 192.1	1.13 28.6	5.69 144.5	5.56 141.3	4.81 122.2	13 5.9	13 5.9
6" 150 mm	3.75 95.3	6 152.4	8.75 222.3	8.63 219.1	1.25 31.8	6.75 171.5	6.63 168.3	5.75 146.1	19 8.6	18 8.2
8" 200 mm	5 127.0	6.72 170.7	11 279.4	12.25 311.2	1.31 33.3	8.75 222.3	8.63 219.1	7.63 193.7	38 17.2	30 13.6
10" 250 mm	5.5 139.7	7.78 197.6	13.38 339.7	13.75 349.3	2.5 63.5	10.88 276.2	10.75 273.1	9.56 242.9	65 29.5	56 25.4
12" 300 mm	7.13 181.0	8.19 208.0	16.13 409.6	17.38 441.3	2.38 60.3	12.88 327.0	12.75 323.9	11.38 288.9	94 42.6	81 36.7
14" 350 mm	7.25 184.2	N/A	17.75 450.9	N/A	3.25 82.6	14.38 365.1	N/A	12.5 317.5	187 84.8	N/A
16" 400 mm	7.5 190.5	N/A	20.25 514.4	N/A	4.5 114.3	16.38 415.9	N/A	15 381.0	270 122	N/A
18" 450 mm	8 203.2	N/A	21.63 549.3	N/A	5.38 136.5	18.38 466.7	N/A	17 431.8	330 150	N/A
20" 500 mm	8.38 212.7	N/A	23.88 606.4	N/A	6.38 161.9	20.25 514.4	N/A	19 482.6	424 192	N/A
24" 600 mm	8.75 222.3	N/A	28.25 717.6	N/A	8.5 215.9	24.25 616.0	N/A	23 584.2	589 267	N/A
30" 800 mm	12 304.8	N/A	34.75 882.7	N/A	9.5 241.3	30 762.0	N/A	28.5 723.9	1,112 504	N/A
36" 900 mm	14.5 368.3	N/A	41.25 1,048	N/A	12 304.8	36 914.4	N/A	34.5 876.3	1,864 846	N/A
42" 1,050 mm	17 431.8	N/A	48 1,219	N/A	13.75 349.3	42 1,067	N/A	40.5 1,029	2,889 1,310	N/A
48" 1,200 mm	20.63 523.9	N/A	N/A	59.5 1,511	17 431.8	48 1,219	N/A	46.5 1,181	5,525 2,506	N/A
54" 1,350 mm	21.25 539.8	N/A	N/A	66.25 1,683	20 508.0	54 1,372	N/A	52.5 1,334	7,000 3,175	N/A
60" 1,500 mm	26 660.4	N/A	N/A	73 1,854	19 482.6	60 1,524	N/A	58.5 1,486	10,100 4,580	N/A

VAL-MATIC

Section 5.3
Air Release Valve

Protection airValve Efficiency

Bulletin 1500

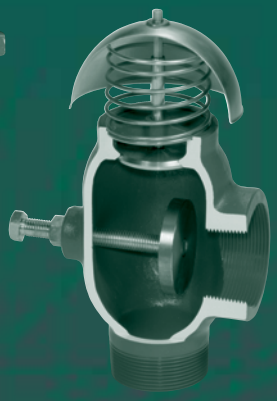

AIR VALVES

PROVIDING SYSTEM EFFICIENCY AND PROTECTION

CLASSIFIED UL WATER QUALITY

NSF/ANSI 61 Certified

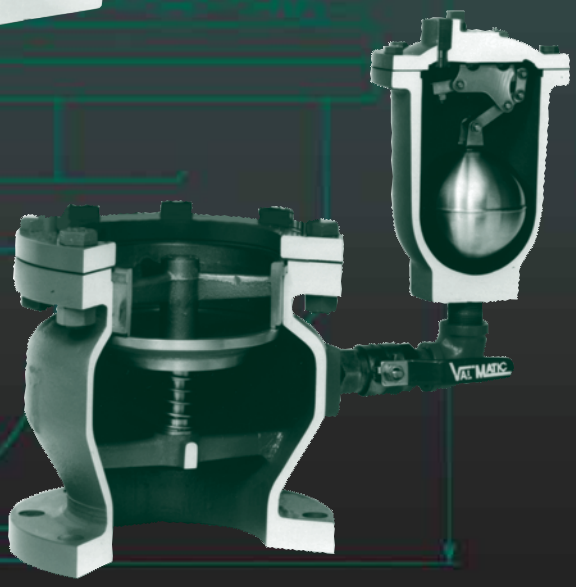

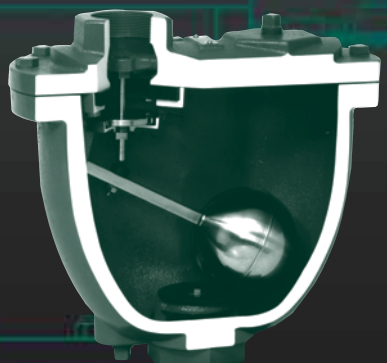

* REFER TO DRAWING*

Air Release Valves

Operational Highlights:

- Maintains system flow efficiency
- Releases unwanted air pockets during system operation
- Protects system against air related surges

Product Features:

- Unconditionally guaranteed stainless steel floats
- Stainless steel 316 internal trim
- Resilient seating for positive shutoff
- Performance proven for over 40 years
- Non-clog design eliminates backwashing

Optional Accessories:

- Vacuum check (prevents inflow of air)
- Outlet hood with screen (prevents debris from entering valves)
- Ball and plug isolation valves (allows valve maintenance)
- Inflow Preventer on outlet (stops flood water and resulting contamination from entering pipeline)
- Backwash kit (for severe wastewater applications)

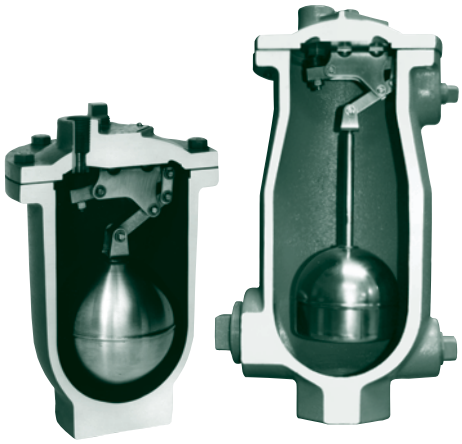

Clean Water* Wastewater

CLASSIFIED UL *WATER QUALITY

c UL us

FM APPROVED

MATERIALS OF CONSTRUCTION		
COMPONENT	STANDARD	OPTIONAL
Body and Cover	Cast Iron ASTM A126 Class B < 300 psig	Ductile Iron ASTM A536 Grade 65-45-12 Stainless Steel ASTM A351 Grade CF8M
Trim	Type 316 Stainless Steel	–
Coating	Universal Alkyd Primer (external)	Non-Stick Fusion Bonded Epoxy (internal & external)

Venting Capacity for Air Release Valve Orifice Sizes

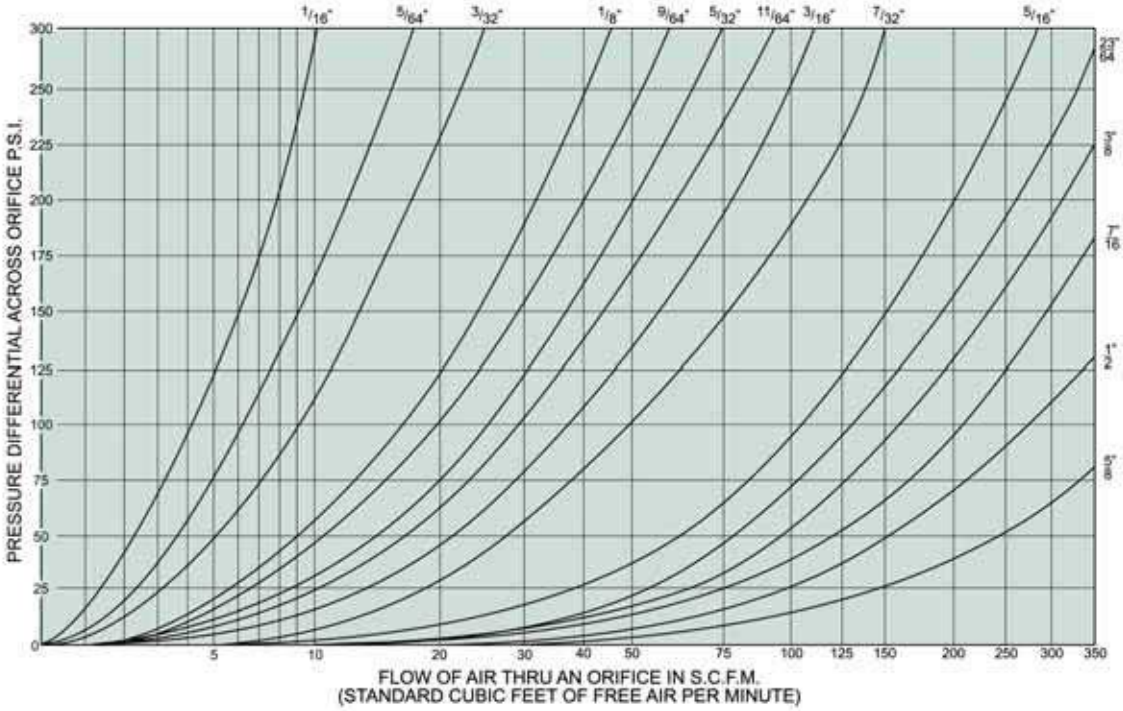

Air Release Valves
Installation Dimensions

WATER AIR RELEASE VALVES						
Inlet Size	Outlet Size	Model Number	CWP PSI	Orifice Size	Dimensions	
					A	B
1/2” NPT	1/2” NPT	15A* •	175	1/16”	4 3/4”	5 1/4”
3/4” NPT	1/2” NPT	15A.2* •	175	1/16”	4 3/4”	5 1/4”
1” NPT	1/2” NPT	15A.3* •	175	1/16”	4 3/4”	5 1/4”
1” NPT	1/2” NPT	22.3* •	175	3/32”	5 1/8”	6”
1/2” - 3/4” NPT	1/2” NPT	22.4* •	175	3/32”	5 1/8”	6”
1/2” NPT	1/2” NPT	22.7* •	300	1/16”	5 1/8”	6”
1/2” - 1” NPT	1/2” NPT	22.9*	300	1/16”	5 1/8”	6”
3/4” - 1” NPT	1/2” NPT	25.5*	150	1/8”	6 1/8”	7”
3/4” - 1” NPT	1/2” NPT	25.6*	300	3/32”	6 1/8”	7”
1” NPT	1/2” NPT	38*	150	3/16”	7”	10”
1” NPT	1/2” NPT	38HP*	500	1/8”	7”	10”
2” NPT	1/2” NPT	38.2*	150	3/16”	7”	10”
1” NPT	1/2” NPT	38.5*	300	5/32”	7”	10”
2” NPT	1/2” NPT	38.6*	300	5/32”	7”	10”
2” NPT	1” NPT	45*	150	23/64”	9 1/2”	12 1/4”
2” NPT	1” NPT	45HP*	400	3/16”	9 1/2”	12 1/4”
3” NPT	1” NPT	45.2*	150	23/64”	9 1/2”	12 1/4”
2” NPT	1” NPT	45.5*	300	7/32”	9 1/2”	12 1/4”
3” NPT	1” NPT	45.6*	300	7/32”	9 1/2”	12 1/4”
2” NPT	1” NPT	50*	500	7/32”	10 7/8”	13”
2” NPT	1” NPT	50HP*	1000	1/8”	10 7/8”	13”
6” 125lb Flg	1” NPT	61*	150	1”	18 3/4”	22”

*NSF/ANSI 61 Certified •UL Listed/FM Approved

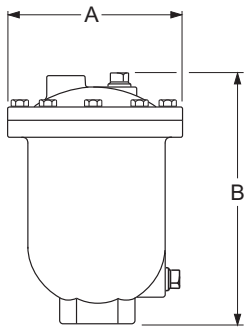

15A - 50HP Air Release Valve

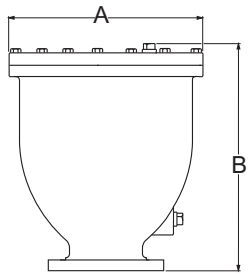

61 Air Release Valve

WASTEWATER AIR RELEASE VALVES						
Inlet Size	Outlet Size	Model Number	CWP PSI	Orifice Size	Dimensions	
					A	B
2” NPT	1/2” NPT	48A	150	3/16”	7”	15 5/16”
3” NPT	1/2” NPT	48A.2	150	3/16”	7”	15 5/16”
2” NPT	1/2” NPT	48A.4	75	5/16”	7”	15 5/16”
3” NPT	1/2” NPT	48A.5	75	5/16”	7”	15 5/16”
2” NPT	1” NPT	49A	150	7/16”	9 1/2”	17 9/16”
3” NPT	1” NPT	49A.2	150	7/16”	9 1/2”	17 9/16”
2” NPT	1” NPT	49A.4	75	1/2”	9 1/2”	17 9/16”
3” NPT	1” NPT	49A.5	75	1/2”	9 1/2”	17 9/16”
4” NPT	1” NPT	49A.6	75	1/2”	9 1/2”	17 9/16”

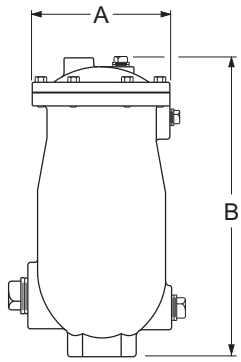

48A - 49A.6 Wastewater Air Release Valves

6 Miscellaneous

Section 6.1
Pressure Tank

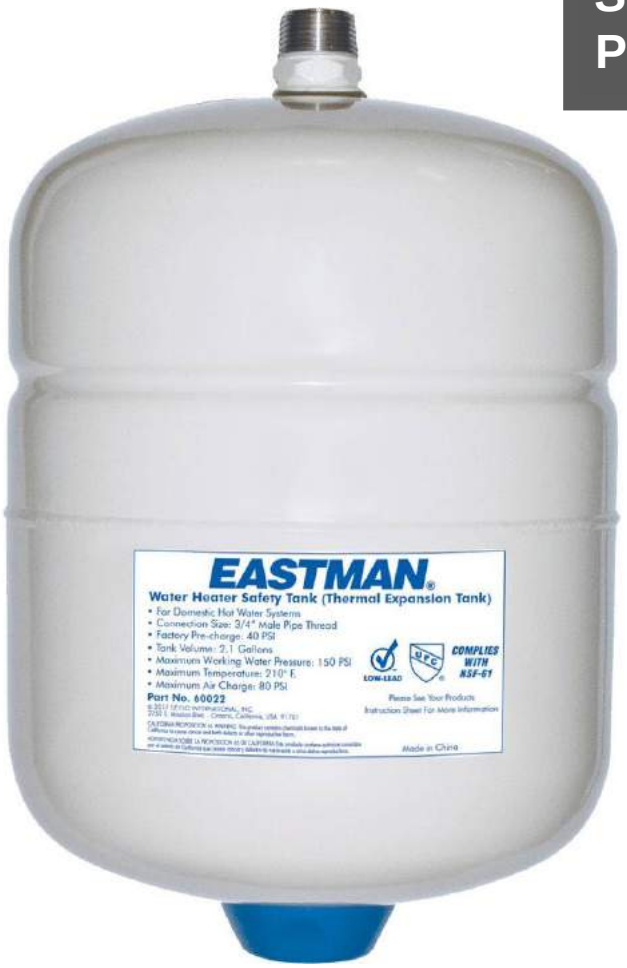

Product Overview

Eastman thermal expansion tanks are designed to prevent backflow from residential water heaters. The tank is for 30 gal. to 60 gal. Maximum working pressure 150 psi and maximum operating temperature is 210°F.

- 3/4 in. MIP connection
- Factory pre-charged at 40 PSI
- 304 stainless steel fittings
- Butyl rubber diaphragm
- 2 Gal. capacity

Specifications

Dimensions			
Product Depth (In.)	8 Inches	Product Height	12.5 Inches
Product Diameter	8.3 Inches	Product Width	8 Inches
Details			
Container Size	2 Gallons	Maximum Capacity	2 Gallons
Finish	White	Product Weight	5 Pounds

Option 200-A — 115/1/60, 1/4HP Open Drip-F ▾

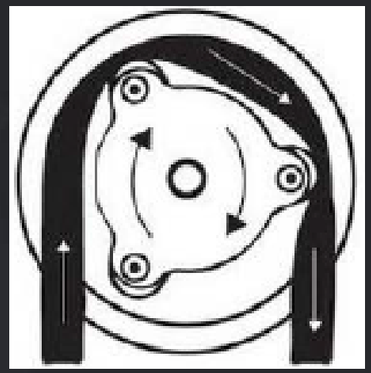

Section 6.2
Vacuum Primer Pump
OPTIONAL

Inlet Requirements	Self-priming
Fluid Types	Mobile or Viscous; Non-abrasive
Dry Run Capability	yes
Submersible?	no
Maximum Pressure	20 PSIG
Maximum Flow Rate	2.2 gallons per min/8.3 liters per min
Fluid Temperatures Supported	Ranges from -75 to 275 degrees F
Mounting Requirements	Horizontal or vertical orientation
Power Source	115V or 230V AC Motor
Variable Flow Rate?	No
Dimensions (in inches)	5 1/2" W x 10 1/4" D x 9 1/2" H
Weight	17.5 lbs.
Inlet/Outlet Fitting Diameter	½ inch barbed vinyl hose fittings
Other Features	The Norprene tube and vinyl fittings are the only parts that come in contact with the pumped fluid. Available with optional tubing for food products and sanitary applications. Self-priming to 15 feet dry suction lift. Available in open, TEFC, DC, and explosion-proof motor enclosures. For cold operating conditions, use high effiency Model 200-M

City of Fort Lupton, Colorado

Public Works Department

Public Works Agreement

This **Public Works Agreement**, hereinafter "Agreement," is entered into by and between the **City of Fort Lupton**, Colorado, hereinafter "City," and **AJI Irrigation**, hereinafter "Contractor."

WHEREAS the parties hereto agree in consideration of the covenants, payments, and agreements set forth herein as follows:

1. Scope of Work

The Contractor shall furnish all tools, equipment, machinery, supplies, superintendence, insurance, transportation, labor and other construction accessories, services and facilities specified or required to be incorporated into and for a permanent part of the completed Work. The Contractor shall provide and perform all necessary labor in a first class and workmanlike manner in accordance with the conditions and prices stated in the Bid Proposal and the requirements, stipulations, provisions and conditions of the Contract Documents. The Contractor shall perform, execute, construct, and complete all things mentioned to be done by the Contractor and all work included in this Scope of Work and the Bid Documents set forth and incorporated hereinbelow.

2. Contract Documents

The executed Contract Documents comprise the following:

A. The Executed Agreement;

B. Addenda;

C. Advertisement for Bids;

D. Invitation for Bids;

E. Instructions to Bidders;

F. Proposed Subcontractors;

G. Non-Collusion Affidavit;

H. Bid, Performance, and Payment Bonds;

I. Proposal;

J. Bid Form;

K. Conditions of Contract;

L. Special Conditions of Contract;

M. City of Fort Lupton, Colorado *Standards and Specifications for the Construction of Public Improvements*, latest edition;

N. Certificates of Insurance; and

O. Plans (Drawings).

This Agreement, together with the other Documents enumerated above, which said other Documents are as fully a part of the Agreement as if hereto attached or herein repeated, form the Contract between the parties hereto. In the event that any provisions in any component part of this Agreement conflicts with any provision of any other component part, the conflict shall be resolved by the Engineer whose decision shall be final.

3. Time for Completion

The Contractor agrees to commence work upon execution of this Agreement. Substantial completion for this project shall be **April 15, 2020**, and final project completion shall be done no later than **May 31, 2020.**

4. Contract Appropriations / No Change Orders

The City states that the amount of money appropriated for this Agreement is equal to or in excess of the Contract Sum. No Change Order to this Agreement requiring additional compensable Work to be performed, which Work causes the aggregate amount payable under this Agreement to exceed the Amount appropriated for the Original Contract will be issued by the City unless the City notifies the Contractor, in writing, that lawful appropriations to cover the costs of the Additional Work have been made.

5. Contract Amount

The City will pay to the Contractor for the performance and completion of the Work encompassed by this Agreement, and the Contractor shall accept as full compensation therefore the Amount of **Two Hundred Thousand Dollars and No Cents**, **$ 217,000.00**, subject to the City's confirmation of the completion of the Scope of Work in accordance with the Contract Documents attached hereto. The said Amount to be paid upon the City's inspection and acceptance of the Work, at the City's sole discretion, including the Contractor's completion of any punch-list items as determined by the City and the execution of any releases by the Contractor deemed necessary by the City.

6. Contractor Payments

The Contractor shall, at no more than or less than monthly intervals on a Date to be agreed by the City and the Contractor, submit Application for Payment requests to the City.

A. The Application for Payment shall clearly identify and provide such detail for which the Engineer and the Contractor shall agree to describe the Work completed by the Contractor up to the Date of the Application for Payment.

B. The City will deduct and retain an amount equal to ten percent (10%) of the Application for Payment's Amount. The retained amounts shall be paid upon Final Acceptance of the work.

C. The City will endeavor to effect the Progress Payments to the Contractor no later than thirty (30) calendar days after the Date the Application for Payment is received by the City.

D. The Contractor shall charge Past Due Accounts an interest rate of two percent (2%) per month on any unpaid balance.

7. Warranty

All warranties for Work performed by the Contractor, repairs to be made or service calls required to be attended to by the Contractor shall be two (2) years. The Contractor shall notify the City when the Scope of Work is Completed and the City will confirm Completion of the Work, at the City's sole discretion. Once the Scope of Work is confirmed by the City as being completed, the Notice of Commencement of Warranty attached hereto and incorporated herein will be tendered by the City. The Warranty Period shall only commence upon the execution and tendering of the Notice of Commencement of Warranty to the Contractor by the City and said Warranty shall continue for the Warranty Period.

8. Amendment / No Assignment

No modification or amendment of this Agreement shall be valid unless in writing and signed by all parties to this Agreement.

9. Complete Agreement

This Agreement, and the documents attached hereto, constitute the entire Agreement between the parties with respect to the subject matter hereof and there are no agreements, representations or warranties other than as set forth herein.

10. Severability

In the event that any portion of this Agreement is held to be unenforceable, the unenforceable portion of this Agreement will be deleted and the remaining provisions of the Agreement shall continue in full force and effect.

11. Governing Law

This Agreement is governed by the laws of the State of Colorado. All parties agree that any dispute regarding enforcement of this Agreement shall be filed in the Weld County District Court after first attempting in good faith to submit the dispute to mediation. The submission of any dispute to mediation shall be a condition precedent to the filing of litigation in this matter, other than the request for injunctive relief.

12. OSHA Requirements

The Contractor agrees that it alone bears the responsibility for providing a safe and healthy work environment and shall provide employees with adequate orientation and training to safely perform the Scope of Work set forth in this Agreement. The Contractor shall at all

times comply with the safety and health regulations of the Occupational Safety and Health Act of 1970 (29 CFR 1926) including all amendments and modifications thereto. In the event there is a conflict between the safety and health provisions of federal, state or local regulations, the more stringent provision shall prevail. The Contractor acknowledges and agrees that with respect to the Scope of Work under this contract, it shall comply with all obligations and assume all responsibilities imposed upon the "Controlling Contractor" as such term is defined and construed under all of OSHA's rules and regulations.

13. No Waiver of Governmental Immunity

The City, its elected officials, officers, and employees are relying upon, and do not waive or intent to waive by any provision of this Agreement, the monetary limitations or any other rights, immunities and protections provided by the C.R.S. § 24-10-101 et seq., *Colorado Governmental Immunity Act*, as amended or otherwise available to the City. Nothing herein shall operate as a waiver of any right the City has of governmental immunity under Colorado law which is specifically herein reserved.

14. Force Majeure.

Neither party shall be liable or responsible to the other party nor be deemed to have defaulted under or breached this Agreement for failure or delay in fulfilling or performing any obligation under this Agreement when such failure or delay is caused by or results from causes beyond the reasonable control of the affected party, including but not limited to fire, floods, embargoes, pandemics, wars, acts of war (whether war is declared or not), insurrections, riots, civil commotions, strikes, lockouts or other labor disturbances, instances affecting public health including pandemics, acts of God or acts, omission, or delays in acting by any governmental authority. Provided, however, that the party so affected shall use reasonable efforts to avoid or remove such causes of non-performance, and shall continue performance hereunder with reasonable dispatch whenever such causes are removed. Either party shall provide the other party with prompt written notice of any delay or failure to perform that occurs by reason of force majeure. The parties shall mutually seek a resolution of the delay or the failure to perform as noted above.

15. Independent Contractor

The Contractor is a separate, legal entity from the City and the parties making this Agreement accordingly with the understanding that the Contractor at all times is acting as an independent contractor and not an employee or agent of the City. All persons retained by the Contractor to perform services pursuant to this Agreement shall be employees or independent contractors of the Contractor and are not employees, contractors or agents of the City. The Contractor does not have the authority to bind the City by contract or otherwise.

16. Indemnification by Contractor

The Contractor shall defend, indemnify and hold the City harmless from any damages, including but not limited to any loss, liability, expenses, suit or claim, or claim for injury to persons or damage to property arising out of the activities of the Contractor or its subcontractors pursuant to this Agreement. Expenses shall include all out of pocket expenses, attorney fees, expert costs and related litigation fees.

17. Approval Required

This Agreement is subject to the final approval of the Fort Lupton, Colorado, City Council and signature by the Mayor of Fort Lupton.

EXECUTED THIS _____ DAY OF _____, 2020

CITY OF FORT LUPTON, COLORADO

_____

By: **Zo Stieber**

Title: **Mayor**

CONTRACTOR

_____

By: _____

Title: _____

City of Fort Lupton, Colorado

Public Works Department

Notice of Award

AJI Irrigation, Inc.
909 E 68th Ave
Denver, CO 80229

Date: **April 7, 2020**

Attention: **Tom Dymesich**

Subject: City of Fort Lupton, Colorado
Irrigation Booster Pumps Project

The City of Fort Lupton, Colorado, has considered the Proposal submitted by you for the above described work in response to the Invitation for Bids dated **January 10, 2020**, and the Instructions to Bidders.

You are hereby notified that your Proposal has been accepted for the work in the amount or amounts shown on your Proposal.

You are required by the Instructions to Bidders to execute the Public Works Agreement and furnish the Performance Bond, the Payment Bond, Insurance Certificates, and other required documentation no later than ten (10) calendar days from the date of this notice.

If you fail to execute the said Public Works Agreement and to furnish the said Bonds no later than seven (7) calendar days from the date of this Notice of Award, the City of Fort Lupton, Colorado, will be entitled to consider all your rights arising out of the City of Fort Lupton, Colorado's acceptance of your Proposal as abandoned and as a forfeiture of your Proposal security as liquidated damages, but not as a penalty, for the delay and extra work caused thereby and also to compensate the City of Fort Lupton, Colorado, for the difference between your Proposal and the next lowest Bid. The City of Fort Lupton, Colorado, will be entitled to such other rights as may be granted by Colorado law.

You are required to return an acknowledged copy of this Notice of Award to the City of Fort Lupton, Colorado.

The insurance certificates required for this project shall be sent to City of Fort Lupton, Attention:

Chris Cross, City Administrator

130 South McKinley Avenue

Fort Lupton, Colorado 80621.

CITY OF FORT LUPTON, COLORADO

_____

By: Zo Stieber

Title: Mayor

Address: 130 South McKinley Avenue

Fort Lupton, Colorado 80621

Telephone: (303) 857-6694

Acceptance of Notice of Award

Receipt of the above Notice to Proceed is hereby acknowledged:

this the _____ day of _____, 2020.

AJI Irrigation, Inc.

By: _____

Title: _____

Telephone: _____

CITY OF

Fort Lupton

EST 1836

COME PAINT YOUR FUTURE WITH US

Upcoming Events

April 4th	Easter Egg Hunt, **Cancelled** Fort Lupton Recreation Center, 203 S. Harrison Ave.
April 13th	Hillside Cemetery Clean Up, 13750 County Road 12 (all week)
April 14th	Town Hall Meeting, 6:30 p.m. at 130 S. McKinley Ave.
April 20th	Shredding Day, 130 S. McKinley Ave. **Cancelled**
April 21st	City Council Meeting, 7:00 p.m. at 130 S. McKinley Ave.
April 23 – 24th	Clean-Up Day for Senior/Disabled Curbside Pick Up **Cancelled**
April 25th	Clean-Up Day, Public Works Shop, 800 12th St. **Cancelled**
April 25th	Fort Lupton Annual Vaccination Clinic, **Cancelled** Fort Lupton Veterinary Hospital, 1025 1st St.